Mini Horns Sirens Buzzer / Electronic Buzzers 118 483/119 483

Electr. Buzzer WM contin/pulse 230VAC GY



Part No.: 119.483.28

MECHANICAL DATA	
Height	80 mm
Diameter	70 mm
Materials	PC/ABS
Housing colour	Grey
Protection category	IP33
Connection	Flat plug
Type of fixing	Wall mounting
Working temperature minimum	0°C
Working temperature maximum	+60°C
Weight with packaging	134 g
Product weight	107 g

ELECTRICAL DATA	
Operating voltage	230V
Operating voltage type	AC
Operating voltage frequency	50Hz
Operating voltage tolerance	+/- 10%
Rated operational voltage	230 VAC
Rated operational current	20 mA
Rated inrush current	<500mA
Protection class	Protection class 2
Pollution degree	2
Overvoltage category	II
Isolation voltage	Ui = 250V; Uimp = 2.500V

ACUSTICAL DATA	
Volume (max) at 1m distance	90,0 dB (A)
Acoustic signal image	Continuous tone Pulse tone
Audio frequency	2400 Hz
Acoustic service life	5,000 h minimum

APPROVAL DATA	
Conforms with CE	Yes
WEEE	Yes
Conforms with ATEX-directive	No
Conforms with CCC	No
Conforms with UL	No
Conforms with FCC	No

! For additional installation and mounting information, refer to the appropriate user guide at www.werma.com. This printed copy is for information only and is subject to alteration.

Mini Horns Sirens Buzzer / Electronic Buzzers 118 483/119 483

Electr. Buzzer WM contin/pulse 230VAC GY

Conforms with IC	No
EAC certificate available	Yes
Conforms with UKCA (Importer)	Yes (WERMA (UK) Ltd.)
Conforms with AS-I	No
ICAO Certification	No
Conforms with DNV	No
Conforms with RoHS CN	No
Conforms with VdS	No

DRAWING

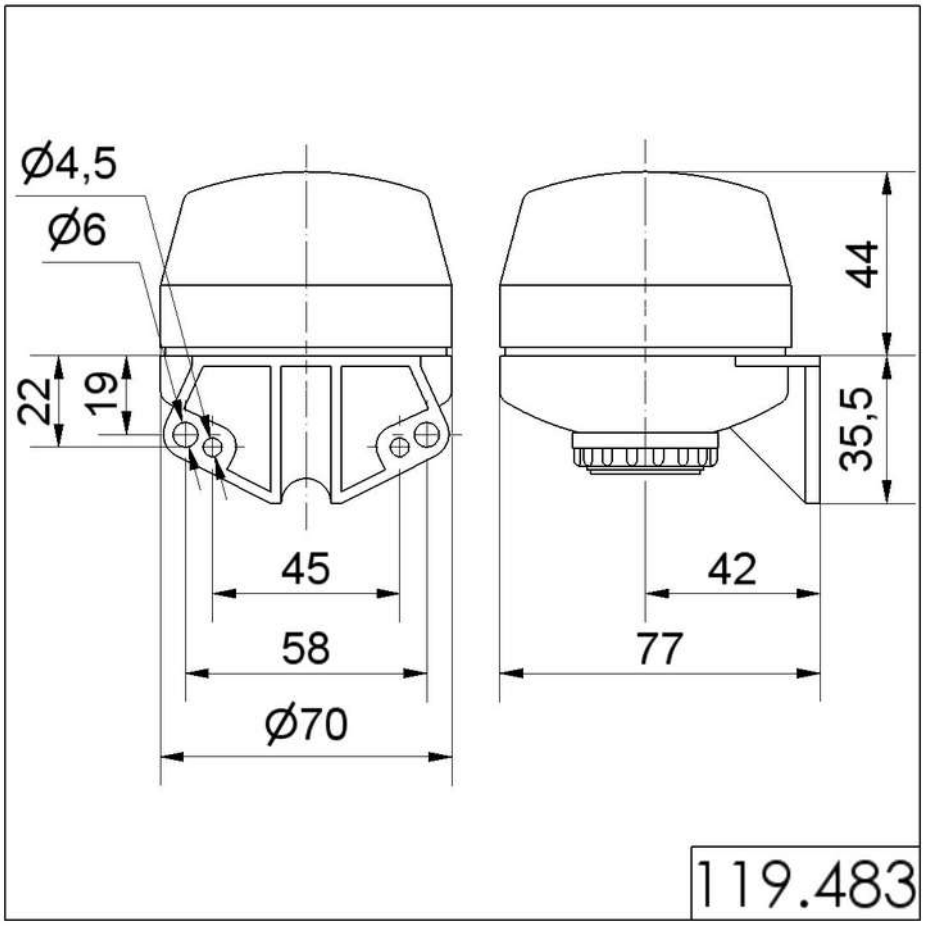

! For additional installation and mounting information, refer to the appropriate user guide at www.werma.com. This printed copy is for information only and is subject to alteration.