Rolled knuckle continuous hinge - 20 mm width

Model : 40-1-3328



Opening angle 270°. Other lengths and pin materials are available on request.
Specific drilling requirements are also available on request.

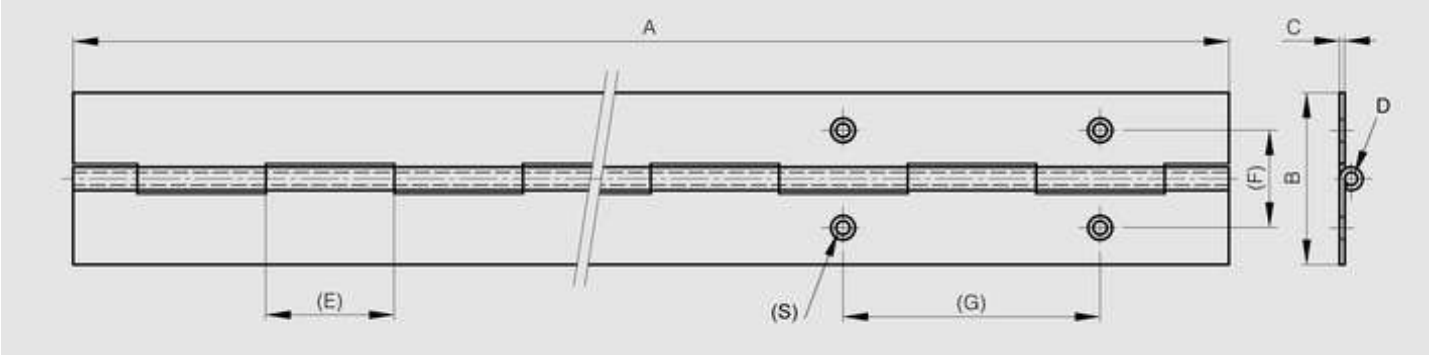

© PINET INDUSTRIE 2014

Material	steel
Finish	raw
A (length)	2040
D (pin diameter)	2
B (width)	20
C	0.8
Weight (g)	320
E	15
Opening angle	270
Note	undrilled
Material	steel
Functions	continuous hinges
Pin material	steel

© PINET INDUSTRIE 2014