TS2269

Temperature cable sensor with process connection

TS-200KLKD6-...../US/

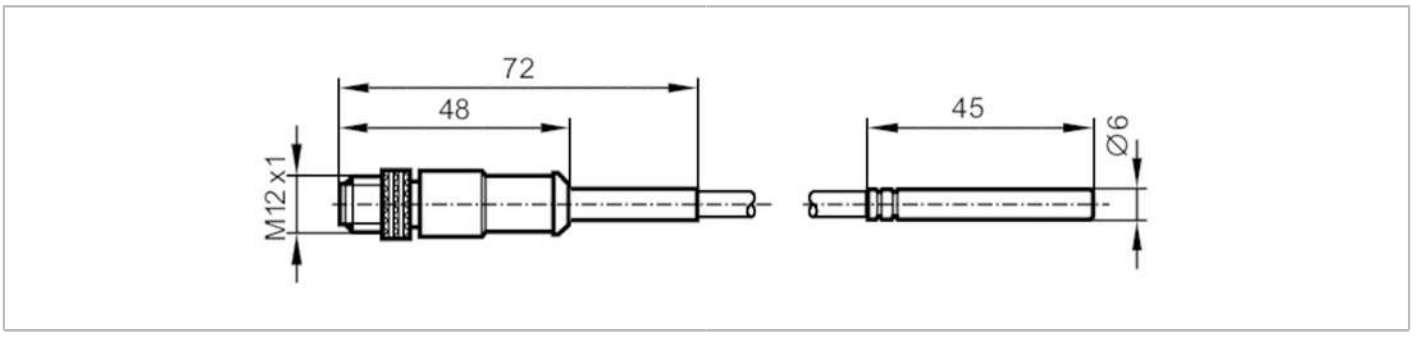

Product characteristics			
Measuring range		-40...90 °C	-40...194 °F
Process connection		clamp adapter Ø 6 mm	
Installation length EL	[mm]	45	
Application			
Special feature		Gold-plated contacts	
Measuring element		1 x Pt 1000; (to DIN EN 60751, class A)	
Media		liquids and gases	
Minimum installation depth	[mm]	15	
Electrical data			
Protection class		III	
Measuring/setting range			
Probe length L	[mm]	45	
Measuring range		-40...90 °C	-40...194 °F
Accuracy / deviations			
Accuracy	[K]	± (0,15 K + 0,002 x|t|)	
Response times			
Dynamic response T05 / T09	[s]	3 / 10; (to DIN EN 60751)	
Operating conditions			
Protection		IP 67	
Tests / approvals			
MTTF	[years]	11415.5	
Mechanical data			
Weight	[g]	65.6	
Housing		cylindrical	
Design		measuring probe	
Dimensions	[mm]	Ø 6 / L = 45	
Materials		stainless steel	
Materials (wetted parts)		stainless steel (316L/1.4404)	
Process connection		clamp adapter Ø 6 mm	
Probe diameter	[mm]	6	
Installation length EL	[mm]	45	

TS2269

Temperature cable sensor with process connection

TS-200KLKD6-...../US/

Remarks	
Remarks	The values for accuracy apply to flowing water.
Pack quantity	1 pcs.

Electrical connection

Cable: 2 m, PUR

Connector: 1 x M12; coding: A; Contacts: gold-plated



Connection

