OY953S

Safety light grids

OYA0910-04-4-60-P-1

For 8-pole sockets the core colours are not standardised.
Please note the wiring of the sensor and the sockets (see data sheet).

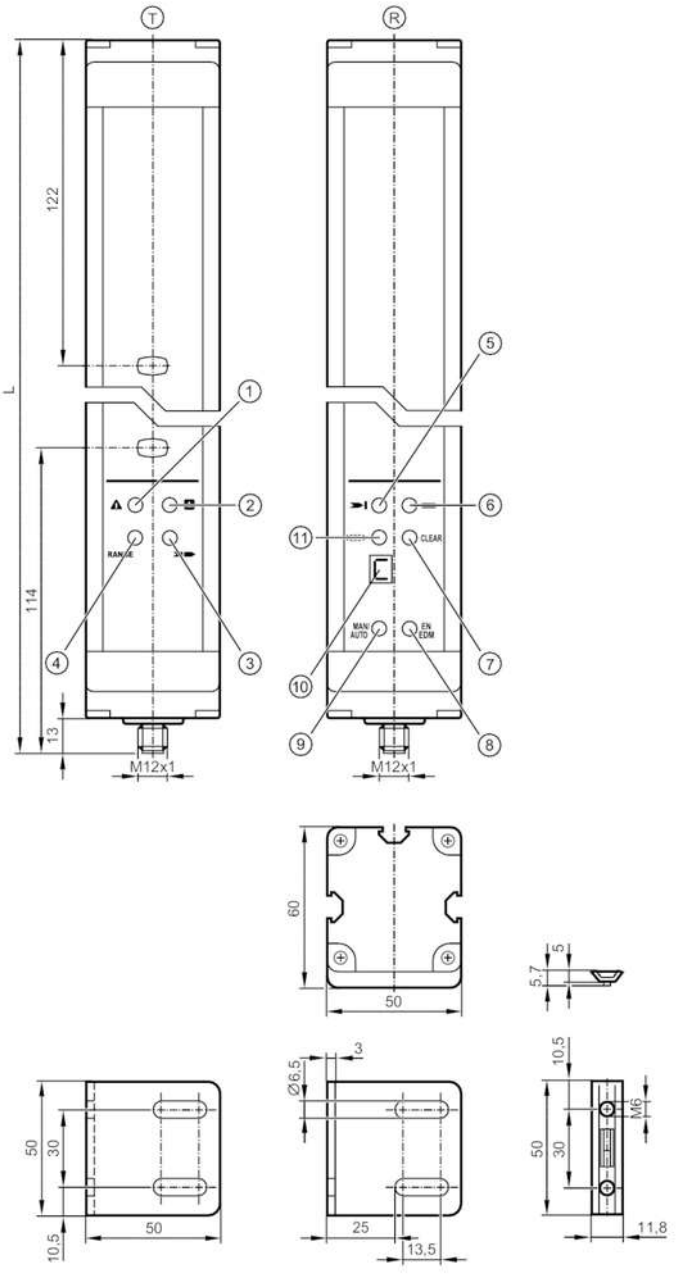

T	transmitter
R	receiver
1	LED red
2	LED green
3	LED yellow
4	LED orange
5	LED red
6	LED green
7	LED yellow
8	LED yellow
9	LED yellow
10	display
11	LED orange

OY953S

Safety light grids

OYA0910-04-4-60-P-1

Product characteristics		
Type of light		infrared light
Electrical design		PNP
Protection		IP 65
Application		
Protective function		access prevention body protection
Electrical data		
Operating voltage tolerance	[%]	20
Operating voltage	[V]	24 DC
Protection class		III
Reverse polarity protection		yes
Power-on delay time	[s]	< 10
Type of light		infrared light
Wave length	[nm]	950
Receiver		
Current consumption	[mA]	250
Transmitter		
Current consumption	[mA]	125
Outputs		
Electrical design		PNP
Number of OSSD outputs		2
Max. current load per OSSD output	[mA]	500; (24 V)
Short-circuit protection		yes
Detection zone		
Protected area height	[mm]	910
Number of beams		4
Protection area width (low light intensity)	[m]	8...30
Protection area width (high light intensity)	[m]	18...60
Response times		
Response time	[ms]	7
Operating conditions		
Applications		class C to EN 60654-1 weatherproof application
Ambient temperature	[°C]	-10...55
Max. relative air humidity	[%]	95
Protection		IP 65
Tests / approvals		
EMC		IEC 61496-1
Shock resistance		IEC 61496-1
Vibration resistance		IEC 61496-1
Safety classification		
ESPE type (IEC 61496-1)		4

OY953S

Safety light grids

OYA0910-04-4-60-P-1

Complies with the requirements		ISO 13849-1: 2015 category 4, PL e
		IEC 61508 SIL 3
		IEC 62061 SIL 3
Mission time TM	[h]	175200
PFH	[1/h]	7,9E-09

Mechanical data

Weight	[g]	7660
Dimensions	[mm]	1136 x 50 x 60
Materials		housing: aluminium; front pane: PC
Length L	[mm]	1136

Displays / operating elements

Display	transmitter	4 x LED
	receiver	6 x LED
	receiver	LC display

Accessories

Items supplied	mounting bracket: 6
	slot nuts: 6

Remarks

Pack quantity	1 pcs.

Electrical connection - receiver

Connector: 1 x M12; coding: A; Maximum cable length: 100 m; for wire cross-section 1 mm²



OY953S

Safety light grids

OYA0910-04-4-60-P-1

Connection

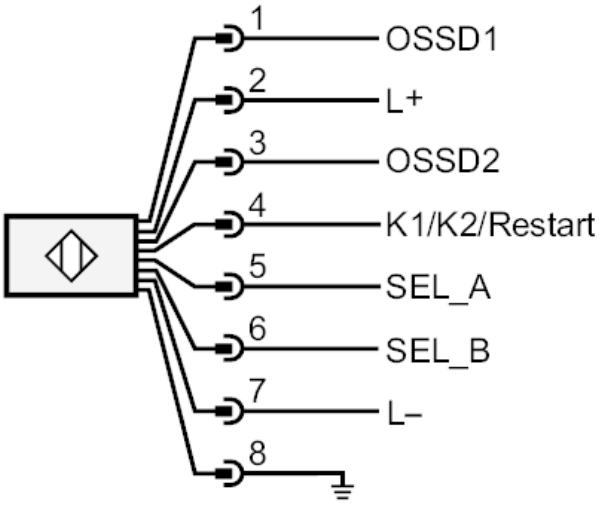

Electrical connection - transmitter

Connector: 1 x M12; coding: A

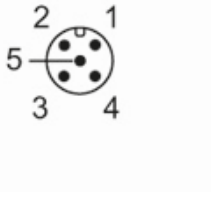

Connection

