NUP 210 ECP

Popular item
SKF Explorer

Dimensions

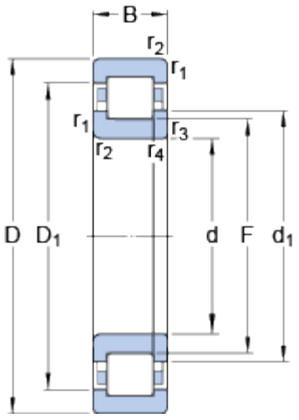

d		50	mm
D		90	mm
B		20	mm
d_1	≈	64	mm
D_1	≈	77.4	mm
F		59.5	mm
$r_{1,2}$	min.	1.1	mm
$r_{3,4}$	min.	1.1	mm

Abutment dimensions

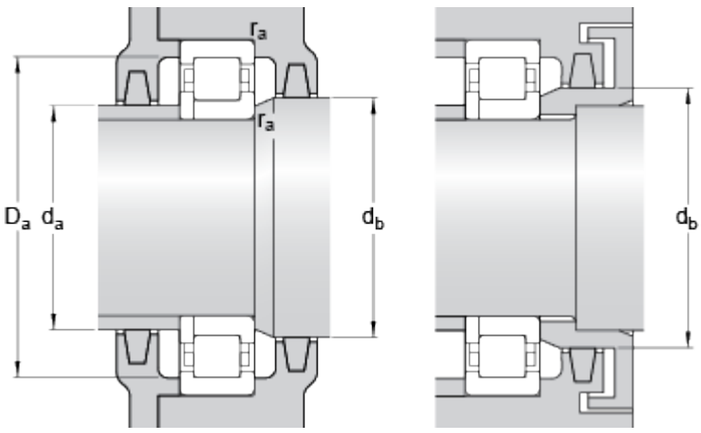

d_a	min.	57	mm
d_b	min.	66	mm
D_a	max.	82.4	mm
r_a	max.	1	mm

Calculation data

Basic dynamic load rating	C	73.5	kN
Basic static load rating	C_0	69.5	kN
Fatigue load limit	P_u	8.8	kN
Reference speed		8500	r/min
Limiting speed		9000	r/min
Calculation factor	k_r	0.15	
Limiting value	e	0.2	
Axial load factor	Y	0.6	

Mass

Mass bearing	0.5	kg