E23014

Radar corner reflector

RADAR CORNER REFLECTOR 200

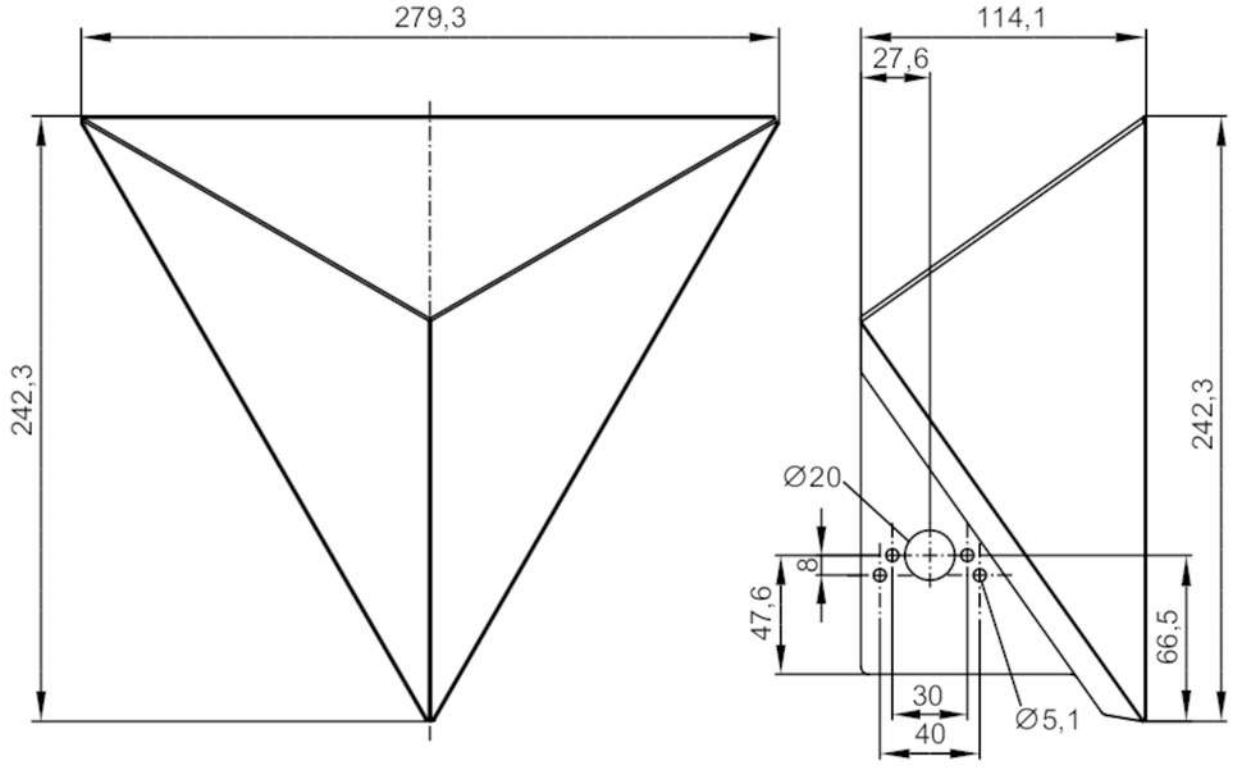

Application		
Design		Winkelreflektor
Mechanical data		
Weight	[g]	1175.9
Dimensions	[mm]	114.1 x 242.3 x 279.3
Materials		stainless steel (1.4571/316Ti)
Remarks		
Pack quantity		1 pcs.