Powering Business Worldwide

05/18 IL03801009Z

Instruction Leaflet
Montageanweisung
Notice d'installation
Instrucciones de montaje
Istruzioni per il montaggio
安装说明
Инструкция по монтажу

T5B..., T5...

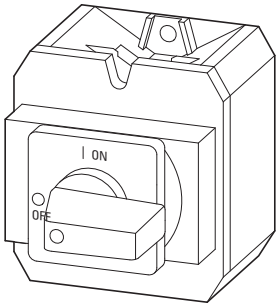

T5(B)…/E

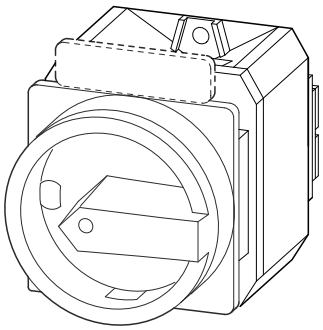

T5(B)…/EA/SVB

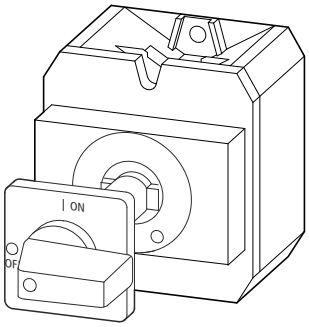

T5(B)…/Z

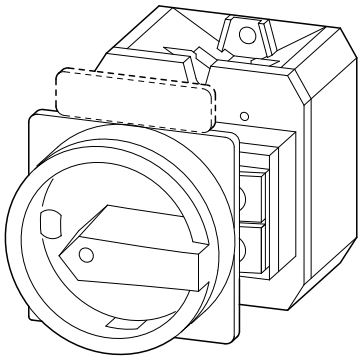

T5(B)…/V/SVB

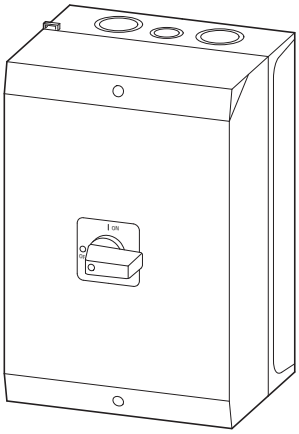

T5B…/I4

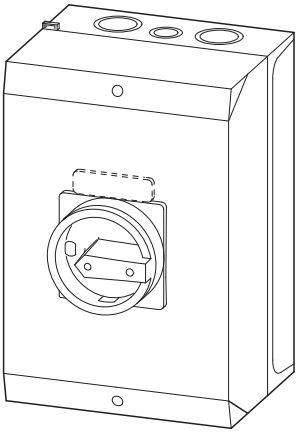

T5B…/I4/SVB

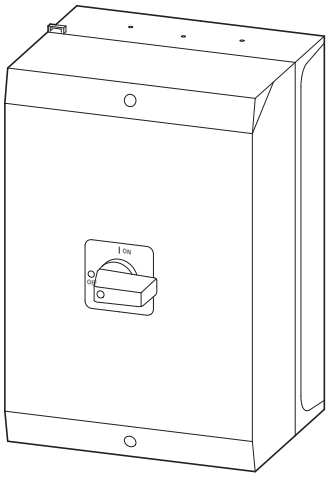

T5…/I5

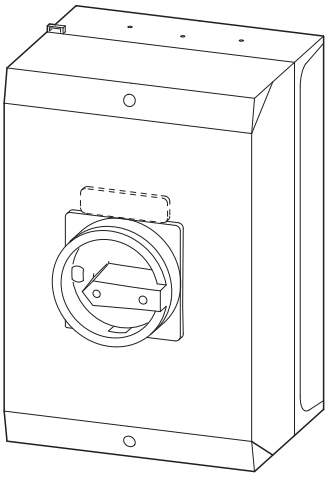

T5…/I5/SVB



(en) **Electric current! Danger to life!**
Only skilled or instructed persons may carry out the following operations.

(de) **Lebensgefahr durch elektrischen Strom!**
Nur Elektrofachkräfte und elektrotechnisch unterwiesene Personen dürfen die im Folgenden beschriebenen Arbeiten ausführen.

(fr) **Tension électrique dangereuse !**
Seules les personnes qualifiées et averties doivent exécuter les travaux ci-après.

(es) **¡Corriente eléctrica! ¡Peligro de muerte!**
El trabajo a continuación descrito debe ser realizado por personas cualificadas y advertidas.

(it) **Tensione elettrica: Pericolo di morte!**
Solo persone abilitate e qualificate possono eseguire le operazioni di seguito riportate.

(zh) **触电危险！**
只允许专业人员和受过专业训练的人员进行下列工作。

(ru) **Электрический ток! Опасно для жизни!**
Только специалисты или проинструктированные лица могут выполнять следующие операции.



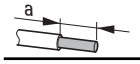

	a
T5B	**13 mm** (0.51")
T5	**13 mm** (0.51")
UV-P3	**15 mm** (0.59")
K-CI-K4	**15 mm** (0.59")
K-CI-K5	**16 mm** (0.63")

T5B..., T5...		tightening torque
	1 x 1.5 - 25 mm^2 2 x 1.5 - 10 mm^2	**4 Nm** (35.5 lb-in)
	1 x 2.5 - 35 mm^2 2 x 2.5 - 16 mm^2	
UL-File: E36 332		
UL	AWG 12/4	

UL/CSA:

Suitable For Use As Motor Branch Circuit Disconnecting Means With Suffix SVB.
Break All Lines.

Short Circuit Withstand
10 kA RMS SYM 600 V AC
Max Fuse T5B… – 100 Class J
T5… – 100 Class J

Standard Short Circuit
5 kA RMS SYM 600 V AC
Max Fuse T5B… – 100 A
T5… – 100 A

Switch or enclosure must be padlockable if used as a Motor Branch Circuit Disconnector means.

T5(B)…/E
T5(B)…/EA/SVB(-SW)
T5(B)…/E+SVB(-SW)-P3
H1-T5

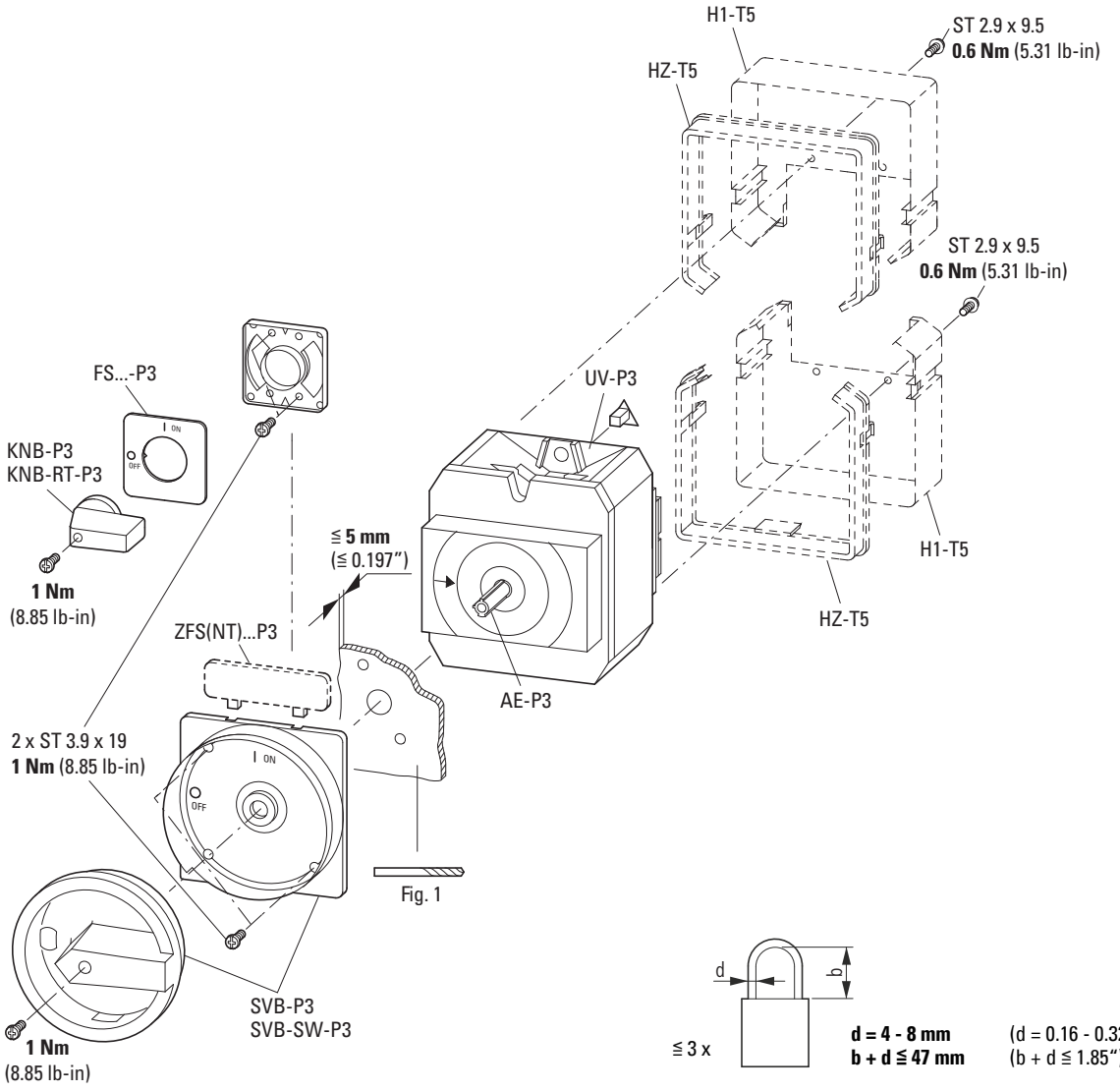

05/18 IL038010092Z

T5(B)…/Z, T5(B)…/Z+SVB(-SW)-P3

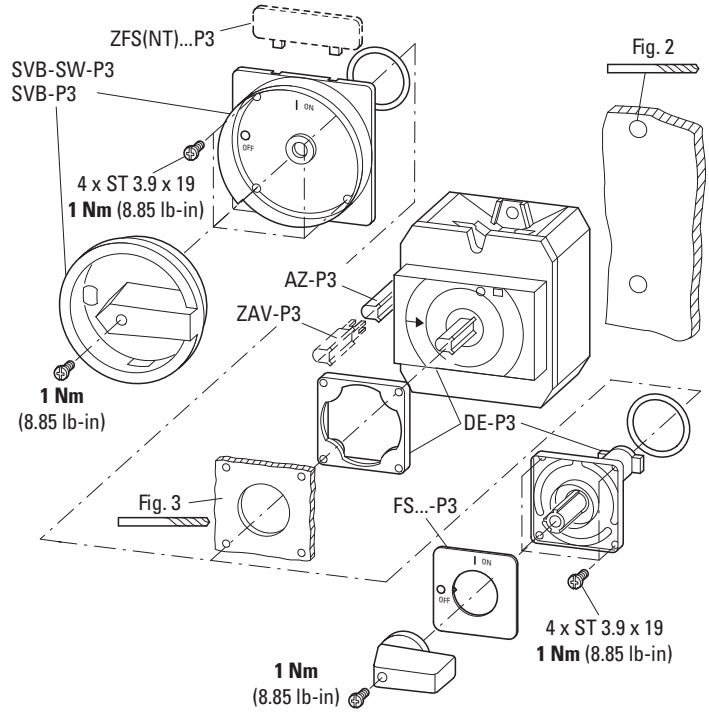

T5(B)…/V/SVB, T5(B)…/Z+V/EA/SVB(-SW)-T5

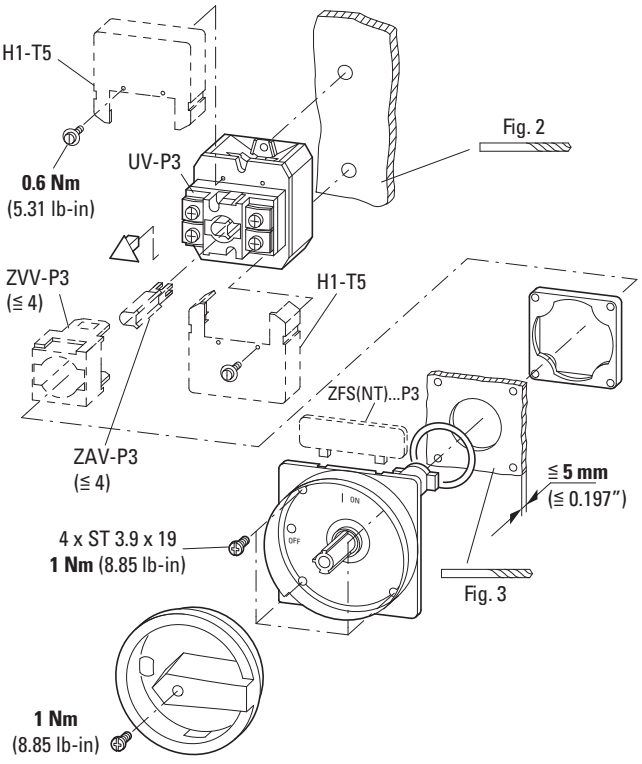

Emergency On Call Service: Local representative (Eaton.eu/aftersales) or +49 (0) 180 5 223822 (de, en)

T5B…/I4(-RT)
T5B…/I4/SVB(-SW)

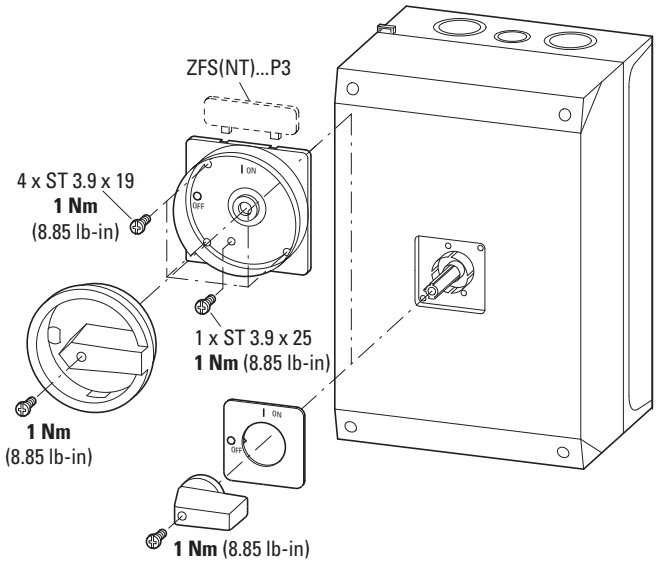

- (en) Components drawn in broken lines are not included in the scope of delivery.
- (de) Gestrichelt gezeichnete Komponenten gehören nicht zum Lieferumfang.
- (fr) Les éléments représentés en pointillés ne font pas partie de la fourniture.
- (es) Los componentes dibujados en líneas discontinuas no están incluídos en el suministro.
- (it) Gil apparechi contrassegnati con un tratteggio con fanno parte della fornitura.
- (zh) 当红黄色的开关在接通的状况时禁止锁闭。
- (ru) Заштрихованные компоненты не входят в объем поставки.

T5…/I5(-RT)
T5…/I5/SVB(-SW)

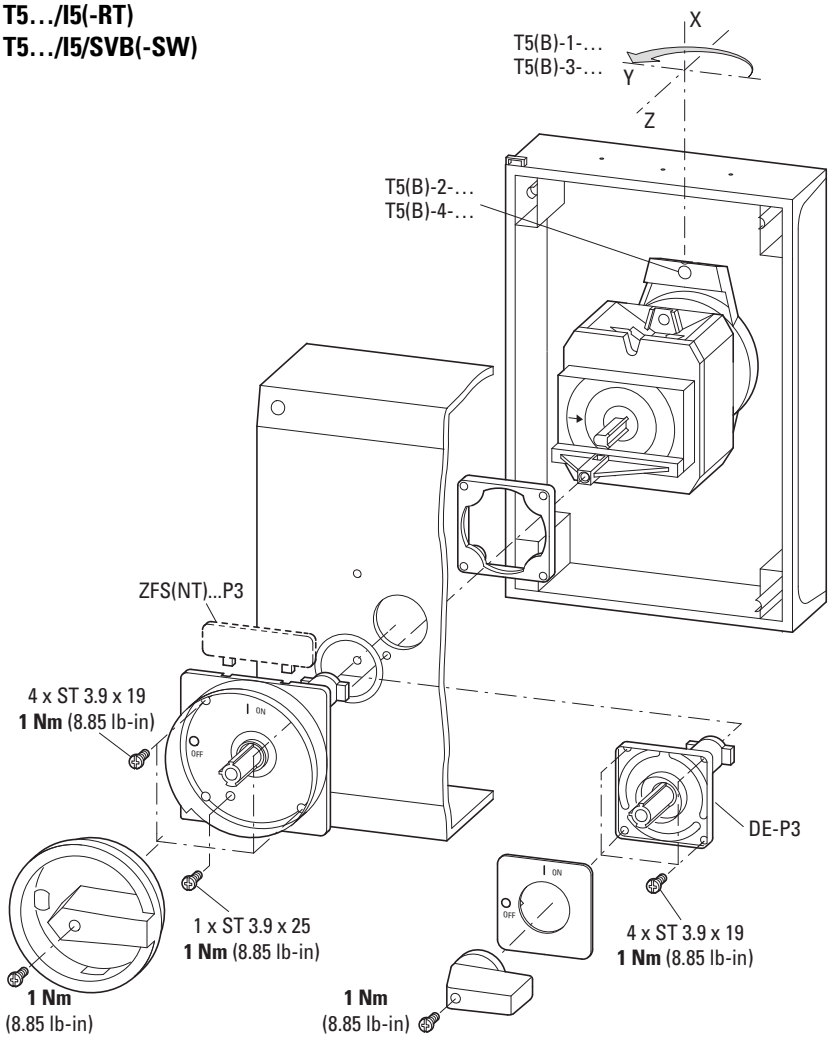

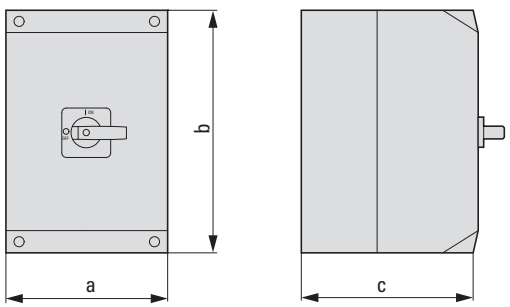

[mm]	T5B-1(2)	T5B-3(4)	T5-1(2)	T5-3(4)
a	160	160	200	200
b	240	240	280	280
c	95	160	125	160

[in]	T5B-1(2)	T5B-3(4)	T5-1(2)	T5-3(4)
a	6.29	6.29	7.87	7.87
b	9.45	9.45	11.02	11.02
c	3.74	6.29	4.92	6.29

05/18 IL038010092

SVB-SW-P3

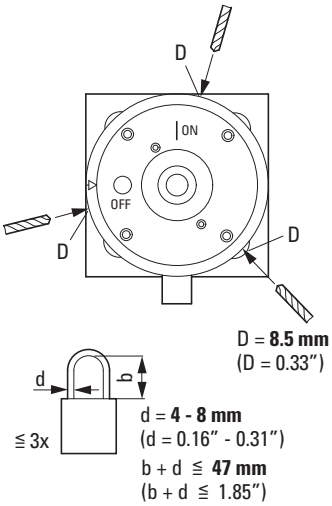

(en) DANGER
Only SVB-SW-P3: Lockable in ON position.
Locking the red-yellow switch in ON position is forbidden!

(de) GEFAHR
Nur SVB-SW-P3: In ON-Position abschließbar.
Abschließen in ON-Position bei rot-gelbem Schalter verboten!

(fr) DANGER
SVB-SW-P3 uniquement: cadenassable en position ON (fermé).
Cadenassage en position ON (fermé) interdit avec un appareil rouge-jaune !

(es) PELIGRO
Sólo SVB-SW-P3: Bloqueable en posición ON.
Bloquear un mando rojo/amarillo en posición ON está prohibido!

(it) PERICOLO
Solo per SVB-SW-P3: lucchettabile nella posizione ON.
È vietato lucchettare nella posizione ON l'interruttore con maniglia rosso-giallo!

(zh) 危险
只适用 SVB-SW-P3： 在打开位置可锁住。
当红黄色的开关在接通的状况时禁止锁闭。

(ru) ОПАСНОСТЬ
Только SVB-SW-P3: Запираемый в позиции «ON»
При красно-желтом выключателе запрещается запирать в позиции «ON»!

[mm]

	T5B…/I4	T5…/I5
x	142	182
y	193	233

[in]

	T5B…/I4	T5…/I5
x	5.59	7.17
y	7.59	9.17

→ NOT 1 : 1

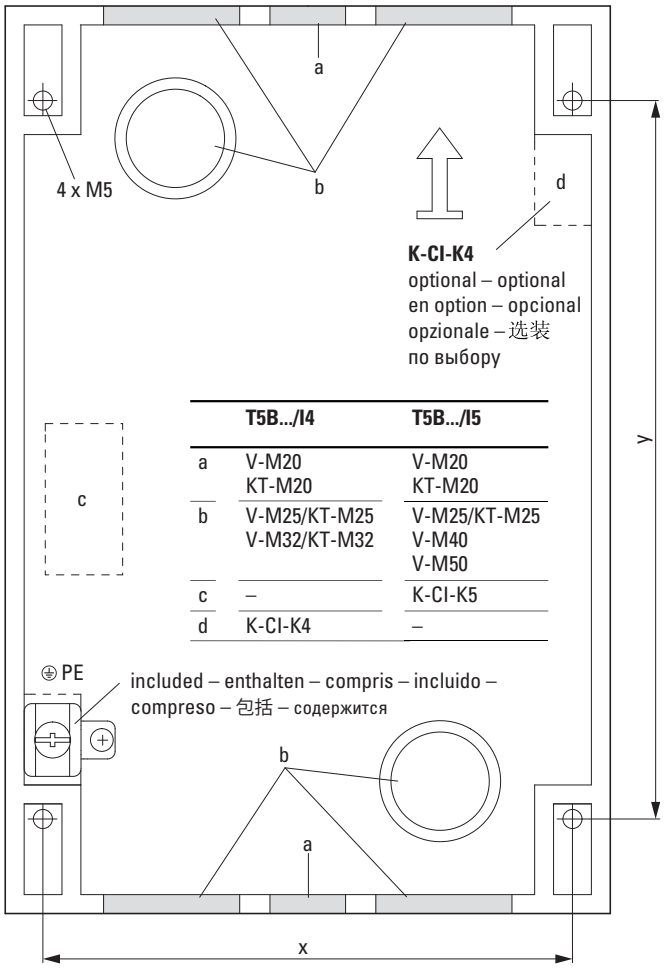

	T5B.../I4	T5B.../I5
a	V-M20 KT-M20	V-M20 KT-M20
b	V-M25/KT-M25 V-M32/KT-M32	V-M25/KT-M25 V-M40 V-M50
c	–	K-CI-K5
d	K-CI-K4	–

Fig. 2

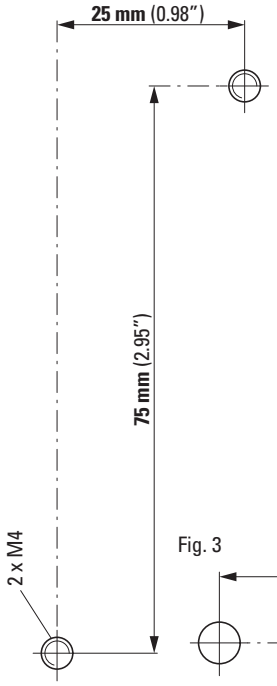

Fig. 1

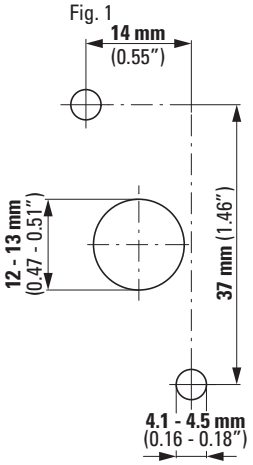

Fig. 3

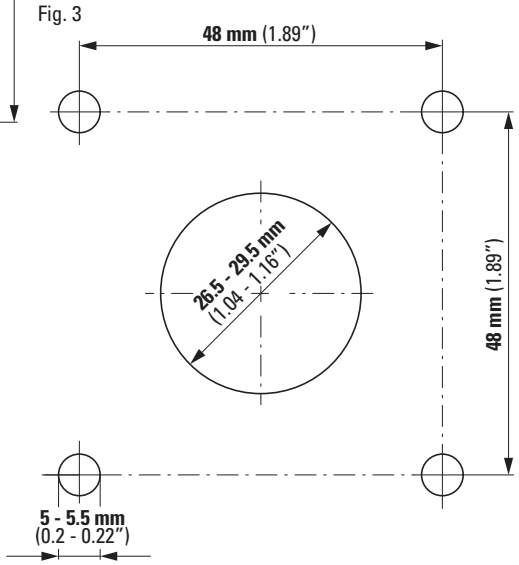

05/18 IL038010092

Emergency On Call Service: Local representative (Eaton.eu/aftersales) or +49 (0) 180 5 223822 (de, en)

Eaton Industries GmbH, Hein-Moeller-Straße 7-11, 53115 Bonn, Germany
© 1999 by Eaton Industries GmbH, Eaton.eu/documentation
Eaton.com/recycling
All Rights Reserved
05/18 IL03801009Z