AC axial fans

A series, Ø 250



- **Material:** Guard grille: Steel, phosphated and coated in black plastic
  Wall ring: Sheet steel, pre-galvanised and coated in black plastic
  Blades: Sheet steel, coated in black
  Rotor: Coated in black
- **Number of blades:** 5
- **Direction of rotation:** Direction of air flow "V" counter-clockwise, direction of air flow "A" clockwise, seen on rotor
- **Type of protection:** IP 44
- **Insulation class:** "B"
- **Mounting position:** Shaft horizontal or rotor on bottom; rotor on top on request
- **Condensate discharges:** Rotor-side
- **Mode of operation:** Continuous operation (S1)
- **Bearings:** Maintenance-free ball bearings

Nominal data		Curve	Nominal voltage	Frequency	Air flow	Speed/rpm	Power input	Current draw	Capacitor	Sound pressure level	Max. operative range	Perm. amb. temp.	Mass without attachments	Electr. connection
Type	**Motor**		**VAC**	**Hz**	**m³/h**	**rpm**	**W**	**A**	**µF/VDB**	**dB(A)**	**Pa**	**°C**	**kg**	p. 416 f.
***2D 250** (1)	M2D 068-DF	Ⓐ	3~ 230/400 3~ 230/400	50 60	1685 1845	2650 2950	110 160	0.38/0.22 0.45/0.26	— —	72 75	300 300	-25 to +70 -25 to +40	2.2	C1)/C2)
***2E 250**	M2E 068-DF	Ⓑ	1~ 230 1~ 230	50 60	1610 1740	2550 2750	115 165	0.51 0.74	4.0/400 4.0/400	72 73	150 130	-25 to +55 -25 to +50	2.2	A1)
***4D 250** (1)	M4D 068-CF	Ⓒ	3~ 230/400 3~ 230/400	50 60	890 1035	1420 1650	30 35	0.16/0.09 0.14/0.08	— —	58 62	90 100	-25 to +75 -25 to +75	1.6	C1)/C2)
***4S 250**	M4S 068-CF	Ⓓ	1~ 230 1~ 230	50 60	870 1000	1400 1620	72 67	0.53 0.46	— —	58 62	80 100	-25 to +40 -25 to +50	1.7	B)

subject to alterations

(1) 230 VAC Δ / 400 VAC Y

Curves

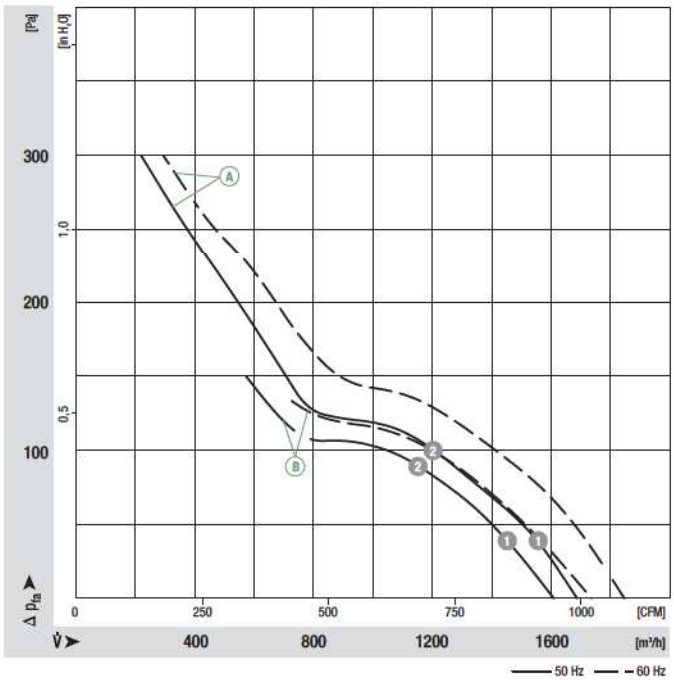

	n [rpm]	P_1 [W]	I [A]
Ⓐ 1	2645	123	0.23
Ⓐ 2	2615	131	0.24
Ⓑ 1	2520	122	0.54
Ⓑ 2	2480	126	0.55

ebmpapst

- **Motor protection:** Ⓐ Ⓒ Without TOP, Ⓑ Ⓓ TOP wired internally
- **Cable exit:** Ⓐ Ⓒ Ⓓ Lateral, Ⓑ variable
- **Protection class:** I
- **Product conforming to standards:** EN 60335-1, Ⓑ Ⓓ also CE
- **Approvals:** Ⓐ Ⓑ CCC

Direction of air flow



‹ "V"/"A" ›



‹ "V"/"A" ›



‹ "V"/"A" ›

	Without attachments	With full round nozzle	With guard grille for full nozzle
"V"	A2D 250-AA02 -01	W2D 250-CA02 -01	S2D 250-BA02 -01
"A"	A2D 250-AA02 -02	W2D 250-CA02 -02	S2D 250-BA02 -02
"V"	A2E 250-AE65 -01	W2E 250-CE65 -01	S2E 250-BE65 -01
"A"	A2E 250-AE65 -02	W2E 250-CE65 -02	S2E 250-BE65 -02
"V"	A4D 250-AA04 -01	W4D 250-CA04 -01	S4D 250-BA04 -01
"A"	A4D 250-AA04 -02	W4D 250-CA04 -02	S4D 250-BA04 -02
"V"	A4S 250-AA02 -01	W4S 250-CA02 -01	S4S 250-BA02 -01
"A"	A4S 250-AA02 -02	W4S 250-CA02 -02	S4S 250-BA02 -02

Curves

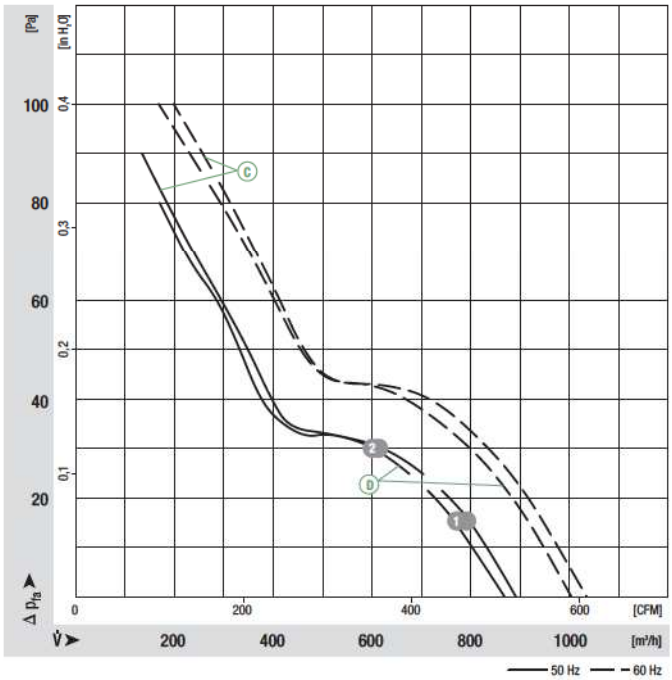

	n [rpm]	P_1 [W]	I [A]
Ⓒ ❶	1420	32	0.09
Ⓒ ❷	1410	33	0.09
Ⓓ ❶	1400	70	0.52
Ⓓ ❷	1395	71	0.52

AC axial fans

A series, Ø 250, drawings of directions of air flow "V" and "A"

Without attachments

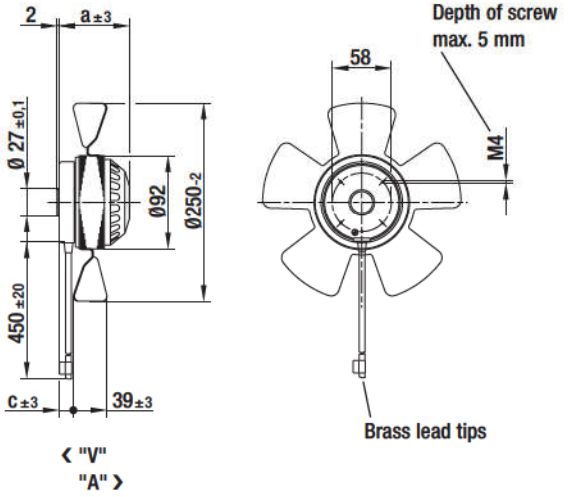

Type		a	c
A2D 250-AA02 -01	"V"	83.0	27.0
A2D 250-AA02 -02	"A"	83.0	27.0
A2E 250-AE65 -01	"V"	83.0	27.0
A2E 250-AE65 -02	"A"	83.0	27.0
A4D 250-AA04 -01	"V"	73.0	19.0
A4D 250-AA04 -02	"A"	73.0	19.0
A4S 250-AA02 -01	"V"	73.0	19.0
A4S 250-AA02 -02	"A"	73.0	19.0

With full round nozzle

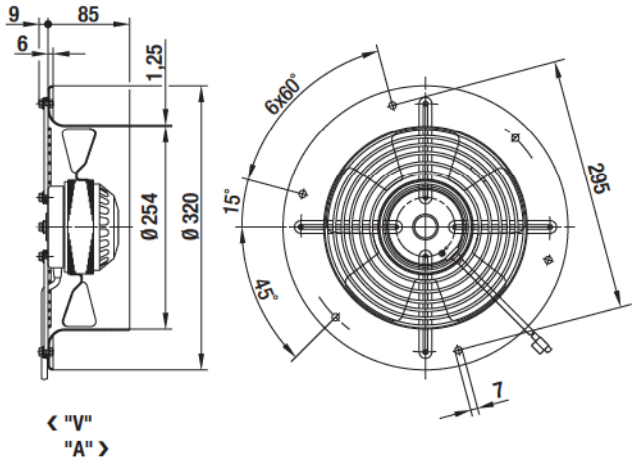

Type	
W2D 250-CA02 -01	"V"
W2D 250-CA02 -02	"A"
W2E 250-CE65 -01	"V"
W2E 250-CE65 -02	"A"
W4D 250-CA04 -01	"V"
W4D 250-CA04 -02	"A"
W4S 250-CA02 -01	"V"
W4S 250-CA02 -02	"A"

With guard grille for full nozzle

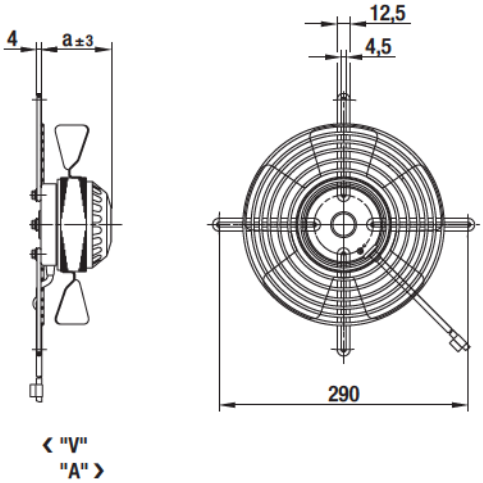

Type		a
S2D 250-BA02 -01	"V"	83.0
S2D 250-BA02 -02	"A"	83.0
S2E 250-BE65 -01	"V"	83.0
S2E 250-BE65 -02	"A"	83.0
S4D 250-BA04 -01	"V"	73.0
S4D 250-BA04 -02	"A"	73.0
S4S 250-BA02 -01	"V"	73.0
S4S 250-BA02 -02	"A"	73.0