E74205

AS-Interface flat cable

Flat cable 100 meter TPE ye

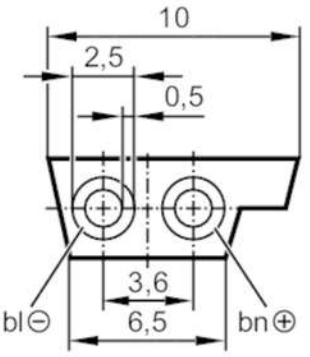

Electrical data		
Operating voltage	[V]	26.5...31.6 DC; (Peak voltage 300 V)
Operating conditions		
Ambient temperature	[°C]	-40...105
Mechanical data		
Weight	[g]	8179
Remarks		
Remarks		100 m supplied on a cable drum
Pack quantity		1 pcs.
Electrical connection		

Cable: 100 m, TPE, yellow; 2 x 1.5 mm²