182.72.104.66511Axial-Rillenkugellager

Axial deep groove ball bearings

51107 (Series 511)

main dimensions to DIN 711/ISO 104, single direction, separable

The datasheet is only an overview of dimensions and basic load ratings of the selected product. Please always observe all the guidelines in these overview pages. Further information is given on many products under the menu item "Description". You can also order comprehensive information via the Catalogue selection system (https://www.schaeffler.de/content.schaeffler.de/en/news_media/index.jsp) or by telephone on +49 (91 32) 82 - 28 97.

d	35	mm	
D	52	mm	
T	12	mm	
D_1	37	mm	
d_1	52	mm	
$D_{a\ max}$	42	mm	
$d_{a\ min}$	45	mm	
$r_{a\ max}$	0,6	mm	
r_{min}	0,6	mm	
m	0,089	kg	Mass
C_a	20000	N	Basic dynamic load rating, axial
C_{0a}	46500	N	Basic static load rating, axial
A	0,011		Minimum load factor
n_G	8800	1/min	Limiting speed
n_B	6800	1/min	Reference speed
C_{ua}	2060	N	Fatigue limit load, axial

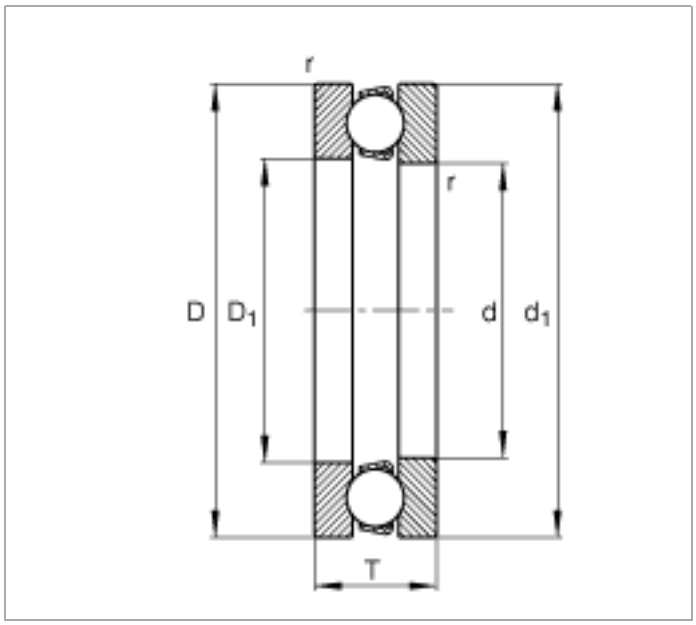
r
r
D
D1
d
d1
T

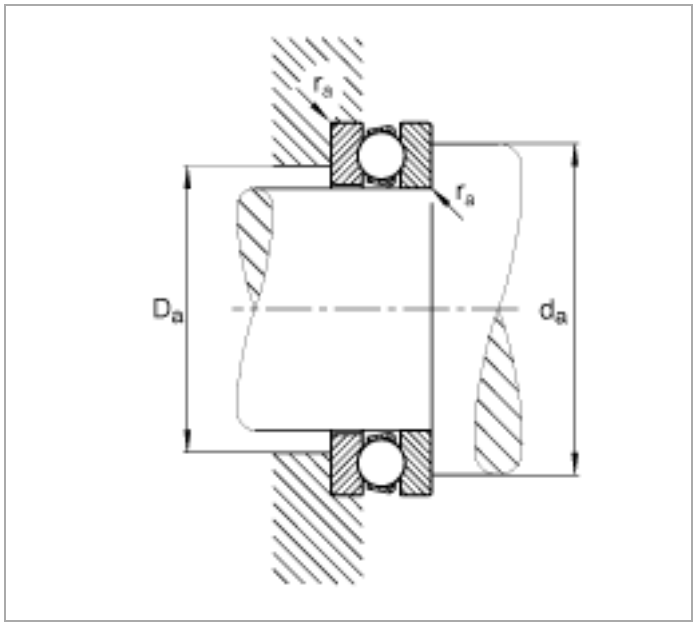
ra
ra
Da
da