TS2239

Temperature cable sensor with bolt-on sensor

TS-200-KL /US

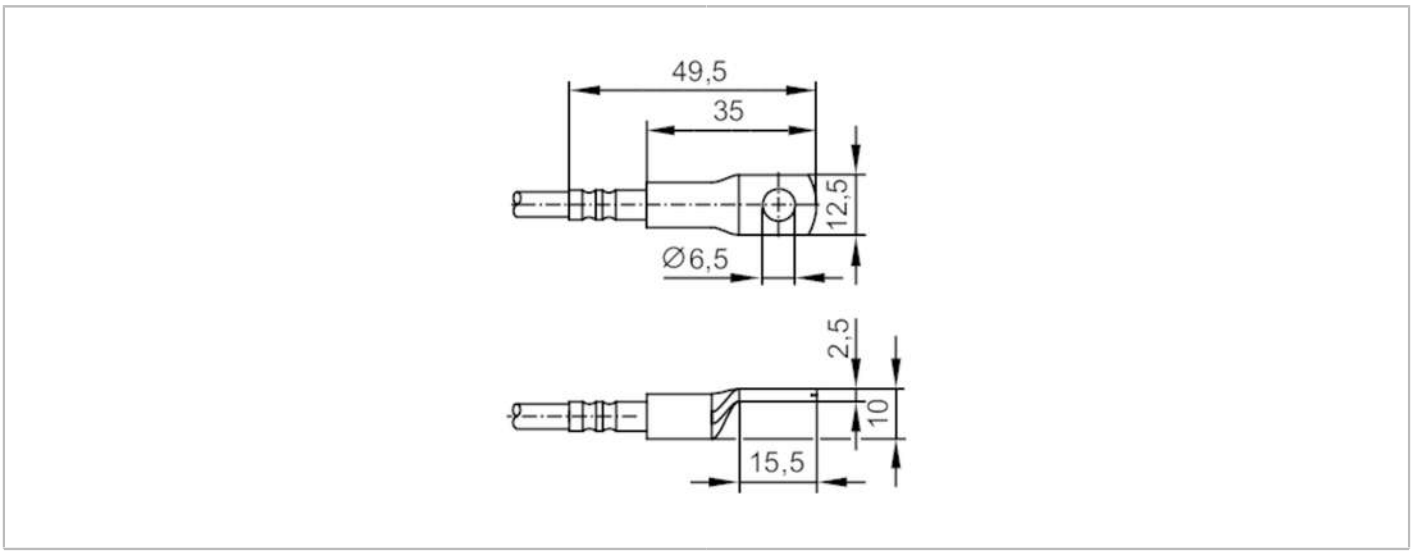

CE

Product characteristics			
Measuring range		-40...90 °C	-40...194 °F
Process connection		12,5 x 8,7 x 49,5 mm	
Application			
Measuring element		1 x Pt 100; (to DIN EN 60751, class A)	
Installation		surface mount RTD for solid bodies	
Electrical data			
Insulation rating	[V]	500	
Protection class		III	
Measuring/setting range			
Measuring range		-40...90 °C	-40...194 °F
Accuracy / deviations			
Accuracy	[K]	± (0,15 K + 0,002 x|t|)	
Response times			
Dynamic response T05 / T09	[s]	12 / 39; (values for a flat aluminium surface (anodised) using a conductive heat paste; reference values for moving water : 10 / 24 (< 0,1 m/s))	
Operating conditions			
Protection		IP 67	
Tests / approvals			
MTTF	[years]	12683.9	
Mechanical data			
Weight	[g]	101.4	
Housing		rectangular	
Design		bolt-on sensor	
Dimensions	[mm]	12.5 x 8.7 x 49.5	
Materials		Sleeve: stainless steel (316Ti/1.4571); crimps: copper nickel-plated	
Process connection		12,5 x 8,7 x 49,5 mm	

TS2239

Temperature cable sensor with bolt-on sensor

TS-200-KL /US

Remarks	
Remarks	applications according to UL S"supply class 2"
Pack quantity	1 pcs.

Electrical connection

Cable: 2 m, PUR, Ø 4.9 mm; with wire end ferrules; 4 x 0.34 mm² (42 x Ø 0.1 mm)

Connection

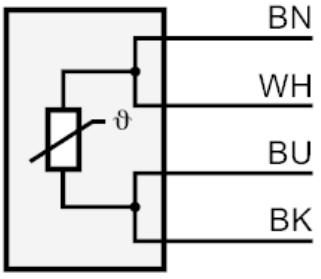

	Core colours :
BK =	black
BN =	brown
BU =	blue
WH =	white