

Contactor,7,5kW/400V,DC-operated

Part no. DILM17-01(RDC24)

Article no. 277050

Powering Business Worldwide

Program

Product range			Contactors
Application			Contactors for Motors
Subrange			Contactors up to 170 A, 3 pole
Connection technique			Screw terminals
Pole			3 pole
Rated operational current			
AC-3			
380 V 400 V	I_e	A	18
AC-1			
Conventional free air thermal current, 3 pole, 50 - 60 Hz			
Open			
at 40 °C	$I_{th} = I_e$	A	40
Max. rating for three-phase motors, 50 - 60 Hz			
AC-3			
220 V 230 V	P	kW	5
380 V 400 V	P	kW	7.5
660 V 690 V	P	kW	11
AC-4			
220 V 230 V	P	kW	2.5
380 V 400 V	P	kW	4.5
660 V 690 V	P	kW	6.5
Contacts			
N/C = Normally closed			1 N/C
Contact sequence			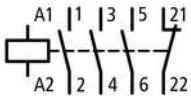
Instructions			Contacts to EN 50012. with mirror contact. integrated suppressor circuit in actuating electronics
Can be combined with auxiliary contact			DILA-XHI(V).. DILM32-XHI11-S
Voltage AC/DC			DC operation

Approbationen

Product Standards	IEC/EN 60947-4-1; UL 508; CSA-C22.2 No. 14-05; CE marking
UL File No.	E29096
UL CCN	NLDX
CSA File No.	012528
CSA Class No.	2411-03, 3211-04
NA Certification	UL listed, CSA certified
Specially designed for NA	No

General

Standards			IEC/EN 60947, VDE 0660, UL, CSA
Lifespan, mechanical			
AC operated	Operations	x 10^6	10
DC operated	Operations	x 10^6	10
Operating frequency, mechanical			
AC operated	Operations/h		5000

DC operated	Operations/ h		5000
Climatic proofing			Damp heat, constant to IEC 60068-2-78 Damp heat, cyclic to IEC 60068-2-30
Ambient temperature		°C	
Open		°C	- 25 - 60
Enclosed		°C	- 25 - 40
Storage		°C	- 40 - 80
Mounting position, AC- and DC operated			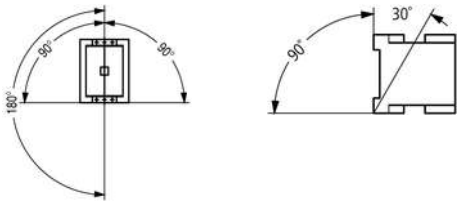
Mechanical shock resistance (IEC/EN 60068-2-27)			
Half-sinusoidal shock, 10 ms			
Main contacts			
N/O contact		g	10
Auxiliary contacts			
N/O contact		g	7
N/C contact		g	5
Mechanical shock resistance (IEC/EN 60068-2-27) when tabletop-mounted			
Half-sinusoidal shock, 10 ms			
Main contacts			
N/O contact		g	6.9
Auxiliary contacts			
N/O contact		g	5.3
N/C contact		g	3.5
Protection type			IP00
Protection against direct contact when actuated from front (EN 90274)			Finger- and back-of-hand proof
Weight			
AC operated		kg	0.42
DC operated		kg	0.48
Terminal capacity main cable			
Solid		mm^2	1 x (0.75 - 16) 2 x (0.75 - 10)
Flexible with ferrule		mm^2	1 x (0.75 - 16) 2 x (0.75 - 10)
Stranded		mm^2	1 x 16
Solid or stranded		AWG	18 - 6
Main cable connection screw/bolt			M5
Tightening torque		Nm	3.2
Terminal capacity control circuit cables			
Solid		mm^2	1 x (0.75 - 4) 2 x (0.75 - 4)
Flexible with ferrule		mm^2	1 x (0.75 - 1.5) 2 x (0.75 - 1.5)
Solid or stranded		AWG	18 - 14
Control circuit cable connection screw/bolt			M3.5
Tightening torque		Nm	1.2
Tool			
Main cable			
Pozidriv screwdriver		Size	2
Standard screwdriver		mm	0.8 x 5.5 1 x 6
Control circuit cables			
Pozidriv screwdriver		Size	2
Standard screwdriver		mm	0.8 x 5.5

			1 x 6
Terminal capacity control circuit cables			
Solid		mm^2	1 x (0.75 - 2.5) 2 x (0.75 - 2.5)
Flexible		mm^2	1 x (0.75 - 2.5) 2 x (0.75 - 2.5)
Flexible with ferrule		mm^2	1 x (0.75 - 1.5) 2 x (0.75 - 1.5)
Solid or stranded		AWG	18 - 14
Tool			
Stripping length		mm	10
Screwdriver blade width		mm	3.5

Main conducting paths

Rated impulse withstand voltage	U_{imp}	V AC	8000
Overvoltage category/pollution degree			III/3
Rated insulation voltage	U_i	V AC	690
Rated operational voltage	U_e	V AC	690
Safe isolation to VDE 0106 Part 101 and Part 101/A1			
between coil and contacts		V AC	440
between the contacts		V AC	440
Making capacity (p.f. to IEC/EN 60947)			
	Up to 690 V	A	238
Breaking capacity			
220/230 V		A	170
380/400 V		A	170
500 V		A	170
660/690 V		A	120
Short-circuit rating			
Short-circuit protection maximum fuse			
Type “2” coordination			
400 V	gG/gL 500 V	A	35
690 V	gG/gL 690 V	A	35
Type “1” coordination			
400 V	gG/gL 500 V	A	63
690 V	gG/gL 690 V	A	50

AC

AC-1 duty			
Conventional free air thermal current, 3 pole, 50 - 60 Hz			
Open			
at 40 °C	$I_{th} = I_e$	A	40
at 50 °C	$I_{th} = I_e$	A	38
at 55 °C	$I_{th} = I_e$	A	37
at 60 °C	$I_{th} = I_e$	A	35
enclosed	I_{th}	A	32
Conventional free air thermal current, 1 pole			
open	I_{th}	A	88
enclosed	I_{th}	A	80
AC-3 duty			
Rated operational current AC-3 open, 50 - 60 Hz, 3 pole	I_e		
220/230 V	I_e	A	18

240 V	I_e	A	18
380/400 V	I_e	A	18
415 V	I_e	A	18
440V	I_e	A	18
500 V	I_e	A	18
660/690 V	I_e	A	12
Motor rating	P	kWh	
220/230 V	P	kW	5
240V	P	kW	5.5
380/400 V	P	kW	7.5
415 V	P	kW	10
440 V	P	kW	10.5
500 V	P	kW	12
660/690 V	P	kW	11
AC-4 duty			
Rated operational current AC-4 open, 50 - 60 Hz, 3 pole	I_e		
220/230 V	I_e	A	10
240 V	I_e	A	10
380/400 V	I_e	A	10
415 V	I_e	A	10
440 V	I_e	A	10
500 V	I_e	A	10
660/690 V	I_e	A	8
Motor rating	P	kWh	
220/230 V	P	kW	2.5
240 V	P	kW	3
380/400 V	P	kW	4.5
415 V	P	kW	5
440 V	P	kW	5.5
500 V	P	kW	6
660/690 V	P	kW	6.5

DC

Rated operational current, open			
DC-1 operation			
60 V	I_e	A	35
110 V	I_e	A	35
220 V	I_e	A	35
440 V	I_e	A	2.9
DC-3 operation			
60 V	I_e	A	35
110 V	I_e	A	35
220 V	I_e	A	10
440 V	I_e	A	0.6
DC-5 operation			
60 V	I_e	A	35
110 V	I_e	A	35
220 V	I_e	A	10
440 V	I_e	A	0.6

Current heat loss (3 pole)

Current heat loss at I_{th}		W	7.3
Current heat loss at I_e to AC-3/400 V		W	1.9
Impedance per pole		mΩ	2

Magnet systems

Voltage tolerance		x U_c	
AC operated	Pick-up	x U_c	0.8 - 1.1
Drop-out voltage AC operated	Drop-out	x U_c	0.3 - 0.6
Notes			RDC 24 (U_{min} 24 V DC/U_{max} 27 V DC) Example: U_c = 0.7 x U_{min} - 1.2 x U_{max} / U_c = 0.7 x 24 V - 1.2 x 27 V DC
DC operated	Pick-up	x U_c	0.7 - 1.2
Notes			at least smoothed two-phase bridge rectifier or three-phase rectifier
DC operated	Drop-out	x U_c	0.15 - 0.6
Power consumption of the coil in a cold state and 1.0 x U_c			
50 Hz	Pick-up	VA	52
50 Hz	Sealing	VA	7.1
50 Hz	Sealing	W	2.1
60 Hz	Pick-up	VA	67
60 Hz	Sealing	VA	8.7
60 Hz	Sealing	W	2.6
50/60 Hz	Pick-up	VA	62 58
50/60 Hz	Sealing	VA	9.1 6.5
50/60 Hz	Sealing	W	2.5 2
DC operated	Pick-up	W	12
DC operated	Sealing	W	0.5
Duty factor		% DF	100
Switching times at 100 % U_c (approximate values)			
Main contacts			
AC operated			
Closing delay		ms	16 - 22
Opening delay		ms	8 - 14
DC operated		ms	
Closing delay		ms	47
Opening delay		ms	30
Arcing time		ms	10
Lifespan, mechanical; Coil 50/60 Hz	at 50 Hz		Mechanical lifespan at 50 Hz approx. 30% lower than under “Technical data, general”

Electromagnetic compatibility (EMC)

Emitted interference			to EN 60947-1
Interference immunity			to EN 60947-1

Technical data according to ETIM 4.0

Number of main contacts as N/Os			3
Rated operation current Ie at AC-1, 400 V			40
Connection type main circuit			Screw connection
Rated control voltage Us at AC 60HZ		V	0
Number of auxiliary contacts as N/Os			0
Rated control voltage Us at AC 50HZ		V	0
Number of auxiliary contacts as N/Cs			1
Suitable for rail-mounting			No
Rated control voltage Us at DC		V	27
Voltage type for actuation			DC
Rated operation current Ie at AC-3, 400 V		A	18
Number of N/Cs as main contact			0
Motor rating at AC-3, 400 V		kWh	7.5

Characteristics

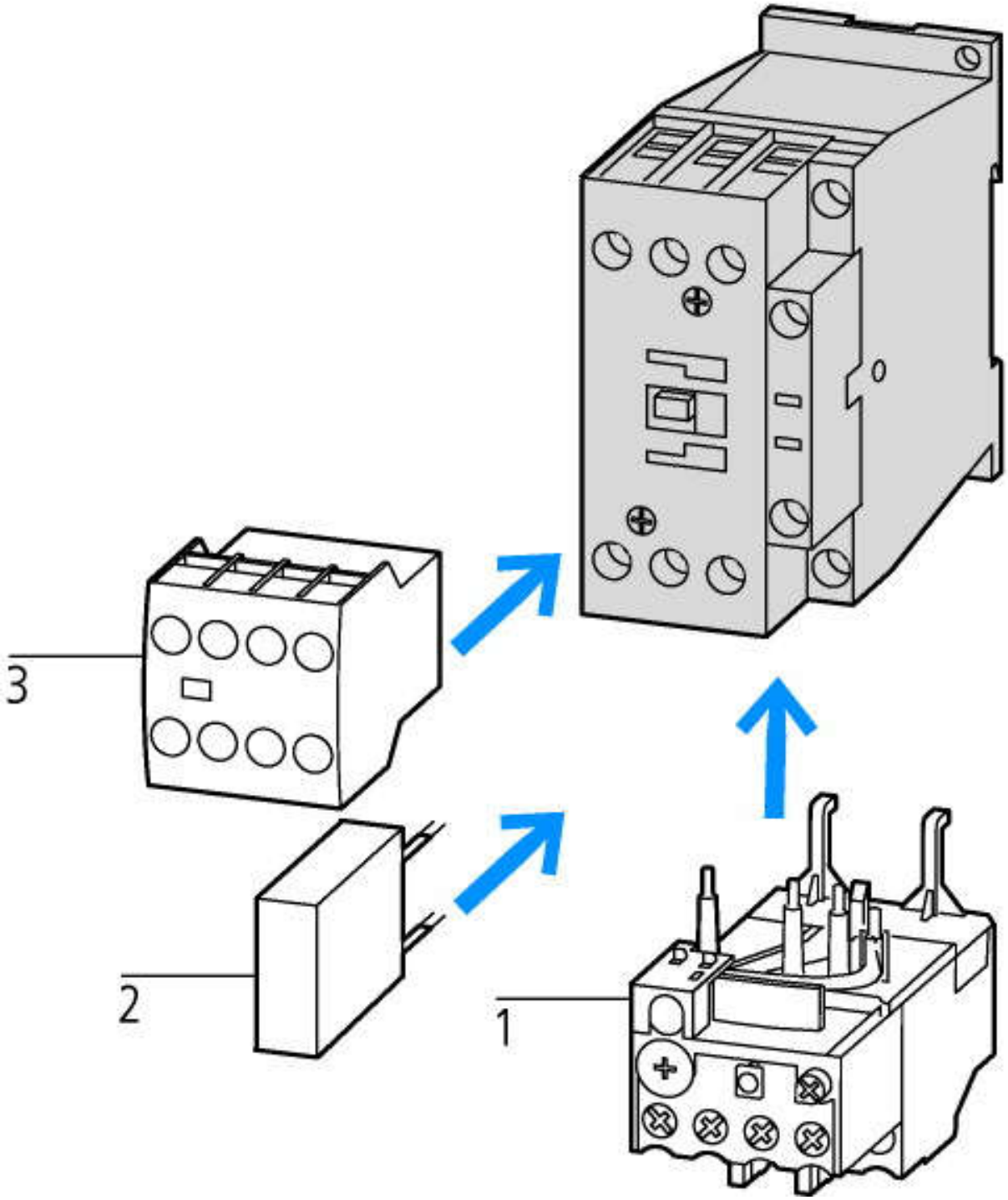

1: Overload relay
2: Suppressor
3: Auxiliary contact modules

Projektieren

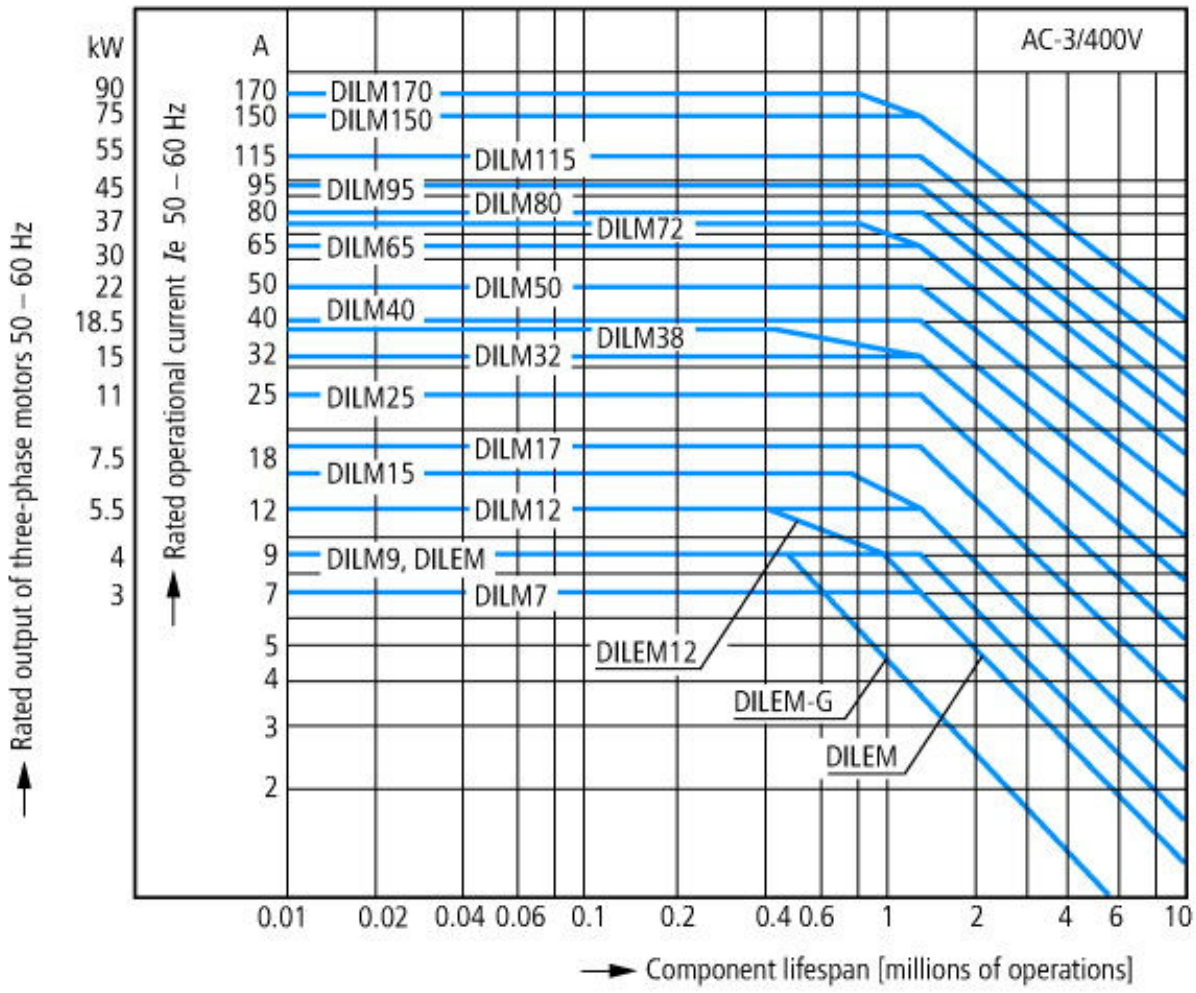

Squirrel-cage motor
Operating characteristics
Starting:from rest
Stopping:after attaining full running speed
Electrical characteristics
Make: up to 6 x rated motor current
Break: up to 1 x rated motor current
Utilization category
100 % AC-3
Typical applications
Compressors
Lifts
Mixers
Pumps
Escalators
Agitators
Fans
Conveyor belts
Centrifuges
Hinged flaps
Bucket-elevators
Air conditioning system
General drives in manufacturing and processing machines

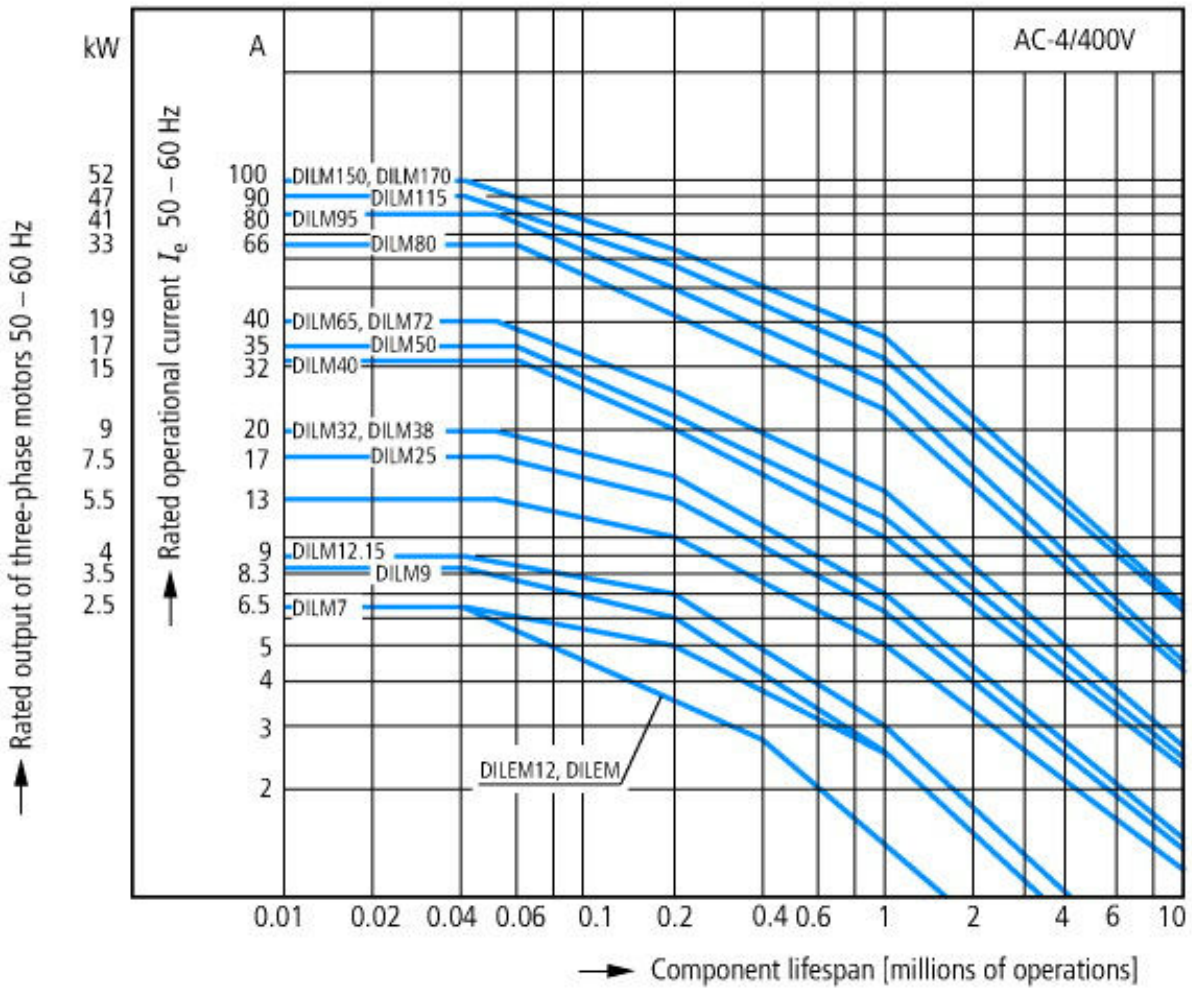

Extreme switching duty
Squirrel-cage motor
Operating characteristics
Inching, plugging, reversing
Electrical characteristics
Make: up to 6 x rated motor current
Break: up to 6 x rated motor current
Utilization category
100 % AC-4
Typical applications
Printing presses
Wire-drawing machines
Centrifuges
Special drives for manufacturing and processing machines

CAD-Data

Product standards CAD data: http://eaton-moeller.partcommunity.com/PARTcommunity/Portal/eaton-moeller

Dimensions

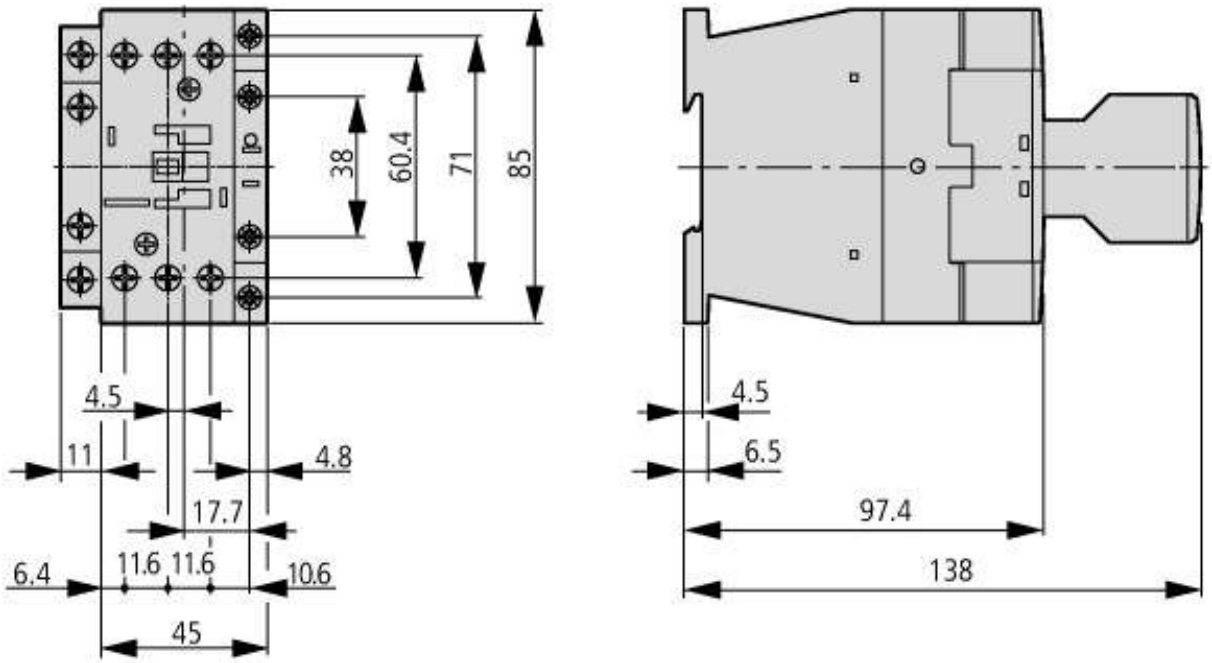

Contactor with auxiliary contact module

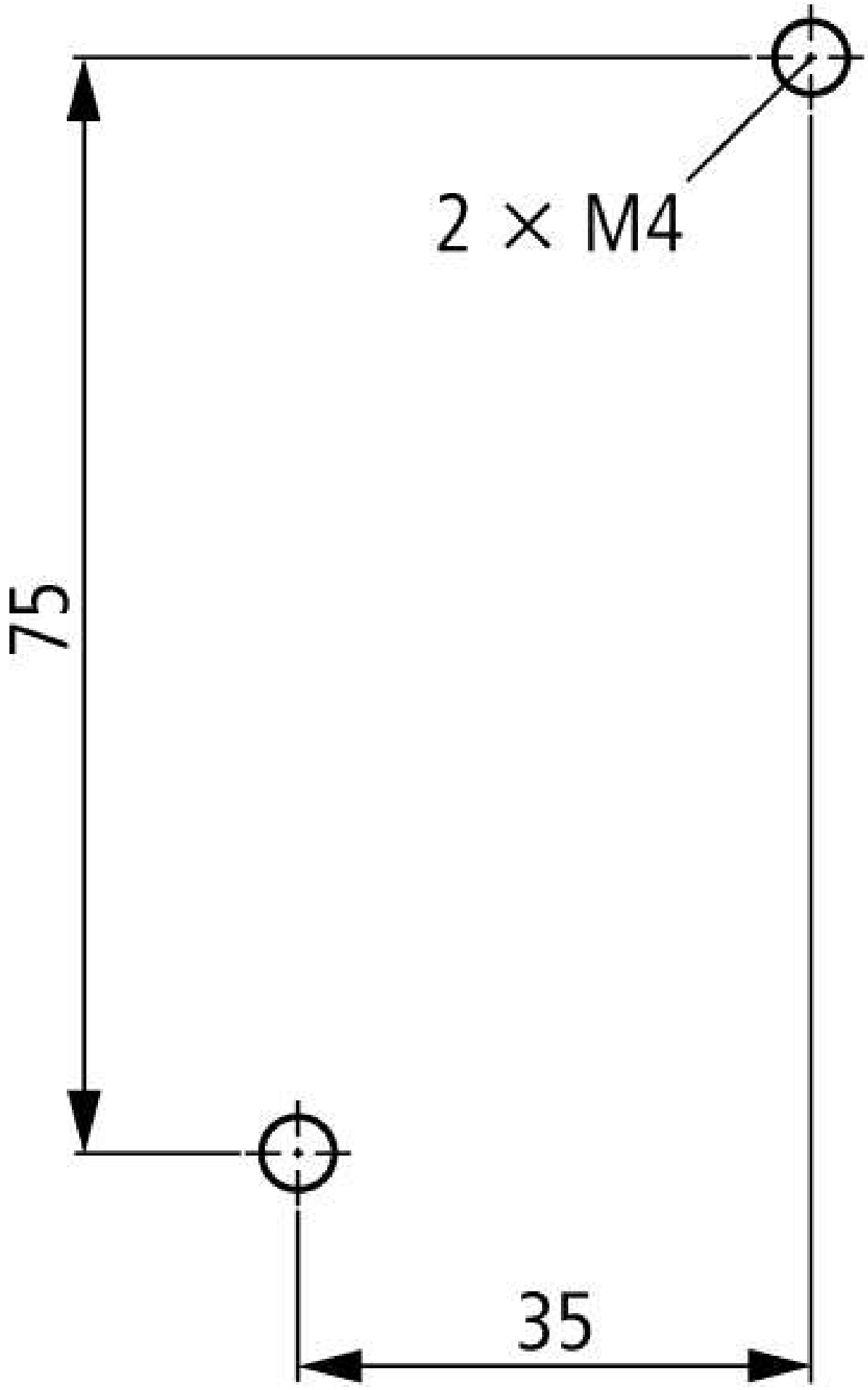

Lateral clearance to earthed parts: 6 mm

Additional product information (links)

IL03407014Z (IL03407014Z) Contactor	ftp://ftp.moeller.net/DOCUMENTATION/AWA_INSTRUCTIONS/IL03407014Z2010_10.pdf
Installation Instructions	http://www.moeller.net/en/support/instructions_awa.jsp

Documentation	http://www.moeller.net/en/support/index.jsp
Engineering	
Projektieren	Projektieren
Motor starters and "Special Purpose Ratings" for the North American market	http://www.moeller.net/binary/ver_techpapers/ver953en.pdf
Busbar Component Adapters for modern Industrial control panels	http://www.moeller.net/binary/ver_techpapers/ver960en.pdf
The Interaction of Contactors with PLCs	http://www.moeller.net/binary/ver_techpapers/ver957en.pdf
Standard Compliant and Functionally Safe Engineering Design with Mechanical Auxiliary Contacts	http://www.moeller.net/binary/ver_techpapers/ver956en.pdf
Switchgear for Luminaires	http://www.moeller.net/binary/ver_techpapers/ver955en.pdf
Effect of the Cabel Capacitance of Long Control Cables on the Actuation of Contactors	http://www.moeller.net/binary/ver_techpapers/ver949en.pdf
X-Start - Modern Switching Installations Efficiently Fitted and Wired Securely	http://www.moeller.net/binary/ver_techpapers/ver938en.pdf
Mirror Contacts for Highly-Reliable Information Relating to Safety-Related Control Functions	http://www.moeller.net/binary/ver_techpapers/ver944en.pdf
X-Start - New Generation:100 years of Moeler contactors - Continous Progress-	http://www.moeller.net/binary/ver_techpapers/ver937en.pdf
Switchgear of Power Factor Correction Systems	http://www.moeller.net/binary/ver_techpapers/ver934en.pdf

© 07/2011 by Eaton Industries GmbH