MK5101

MKT3028BBPKG/G/0.3M/ZH/AS

Magnetic sensors, cylinder sensors

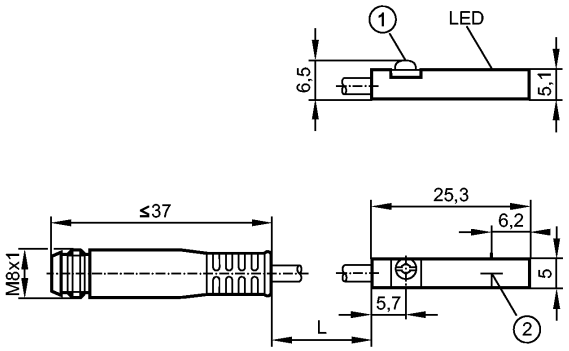

1: Fastening clamp
2: sensing face

Product characteristics		
Cylinder sensor with GMR cell		
Plastic housing for T-slot cylinders		
Cable with connector		
[f] flush mountable		
Magnetic sensitivity 2.8 mT		
Travel speed > 10 m/s		
Electrical data		
Electrical design		DC PNP
Operating voltage	[V]	10...30 DC; "supply class 2" to cULus.
Current consumption	[mA]	< 10
Protection class		III
Reverse polarity protection		yes
Power-on delay time	[ms]	< 30
Outputs		
Output function		normally open
Voltage drop	[V]	< 2.5
Current rating	[mA]	100
Short-circuit protection		yes
Overload protection		yes
Switching frequency	[Hz]	10000
Range		
Magnetic sensitivity	[mT]	2.8
Travel speed	[m/s]	> 10
Accuracy / deviations		
Hysteresis	[mm]	< 1.5
Repeatability	[mm]	< 0.2
Environment		
Ambient temperature	[°C]	-25...85
Protection		IP 65 / IP 67
Tests / approvals		
EMC		EN 61000-4-2 ESD: - CD / 8 kV AD EN 61000-4-3 HF radiated: 10 V/m

		EN 61000-4-4 Burst: 2 kV EN 61000-4-6 HF conducted: 10 V EN 55011: class B
MTTF	[Years]	3694

Mechanical data

Mounting		flush mountable
Housing materials		housing: PA (polyamide); Fastening clamp: stainless steel
Weight	[kg]	0.012

Displays / operating elements

Output status indication	LED	yellow

Electrical connection

Connection	PUR cable / 0.3 m; with M8 connector (snap-fit)

Wiring

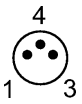

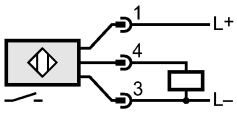

Accessories

Accessories (included)	rubber placeholder; cable clip

Remarks

Remarks	Clamping screw with combined slot/hexagon socket head AF 1.5
Pack quantity [piece]	1