Brand of NTN corporation

Technical data

UCP.312

Bearing units



Grey cast housing, radial insert ball bearing with socket set screws,seal with slinger

KIT CONTENT

UC.312.G2, P312

VISUAL (S)

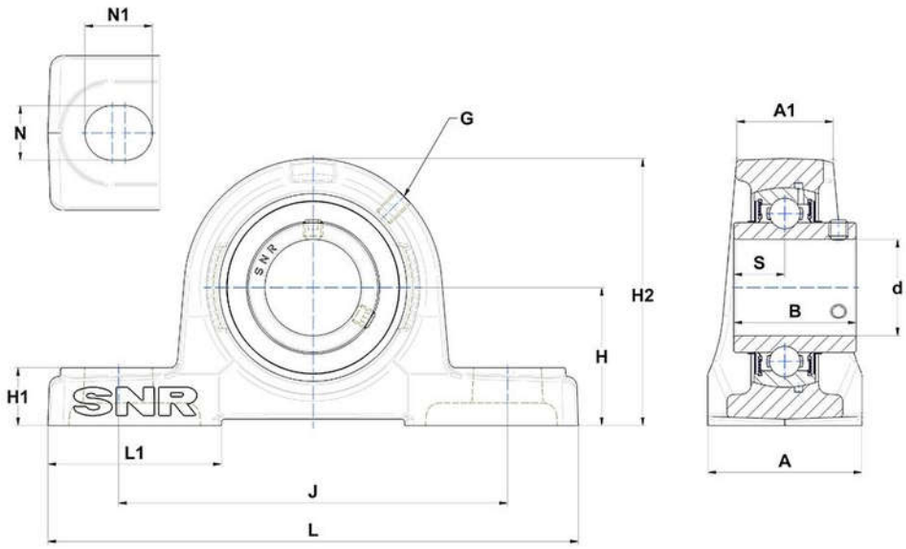

PRODUCT DEFINITION

Brand	SNR
A - Housing width	85 mm
A1 - Housing top width	54 mm
B - Width of Inner Ring	71 mm
d - Shaft diameter	60 mm
G - Grease fitting	M6x1

PRODUCT DEFINITION	
H - Distance mounting base to centerline spheric. seating diam.	85 mm
H1 - Housing foot height	32 mm
H2 - Housing height	165 mm
J - Mounting holes distance	250 mm
L - Housing length	330 mm
L1 - Housing foot length	95 mm
N - Mounting hole dimension	25 mm
N1 - Mounting hole length	38 mm
S - Distance front side/bearing centre	26 mm

PRODUCT PERFORMANCE	
C - Dynamic load rating	81700000 mN
C0 - Static load rating	51800000 mN
Operating temperature min.	253,15 °K
Operating temperature max.	373,15 °K

OTHER FEATURES	
Mass	9,6 kg
Recommended tightening torque for set screw	33 N-m