E40162

Process adapter for small volumetric flow quantities

ADAPTBLOCK D16 G1/2

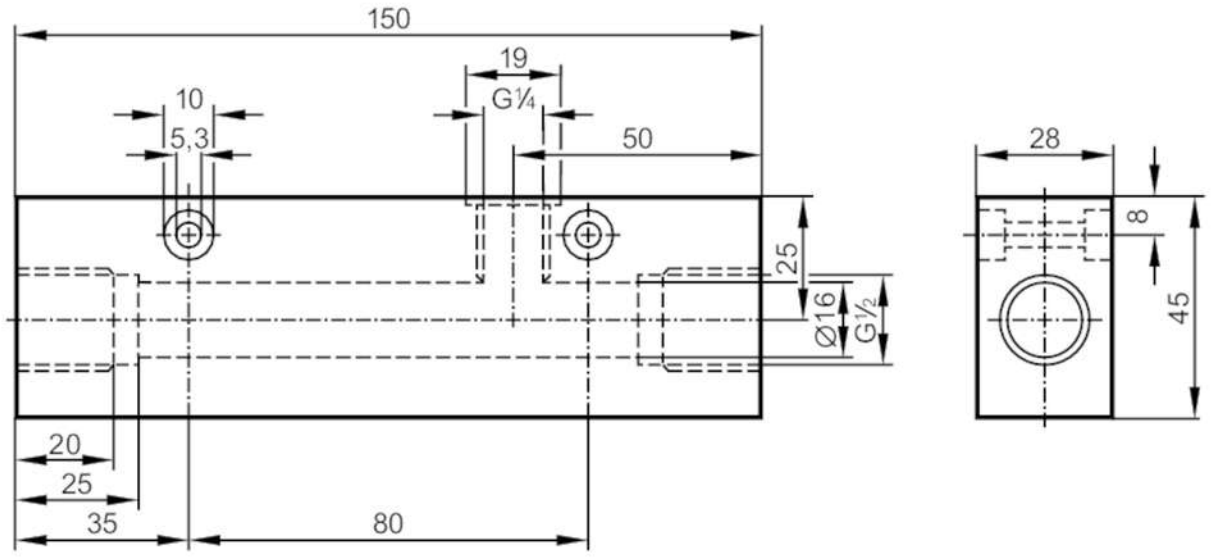

Application		
Design		for flow sensors SID, SF5
Flow range	[l/min]	0.5...5; ((SI1xxx); 0.5...7 (SI5xxx); factory setting with water)
Application		for industrial applications
Media		liquids and gases
Pressure rating	[bar]	300
Tests / approvals		
Pressure Equipment Directive		A possible classification to PED depends on the application and has to be carried out by the user / operator.
Pressure Equipment Directive EAC		The adapter is intended for use in devices, machines and installations that do not fall under the categories of the technical rule TR CU 032/2013.
Safety instructions		The compatibility between medium and product material has to be checked in all applications.
Mechanical data		
Weight	[g]	1346.5
Materials		stainless steel (1.4404 / 316L)
Sensor connection		M18 x 1,5
Process connection		G 1/2
Accessories		
Items supplied		Adapter: 1 x G1/4 BSPP, E40099
		sealings: 1, U-seal
Remarks		
Remarks		Can only be used in combination with the flow sensor’s relative operating mode.
Pack quantity		1 pcs.