Midi free-standing Beacons / Flash Light 828

# Flashing Beacon BM 24VDC RD




**Part No.: 828.100.55**

| MECHANICAL DATA | |
|---|---|
| Height | 137 mm |
| Diameter | 98 mm |
| Materials | PC<br>PC/ABS |
| Dome colour | Red |
| Housing colour | Black |
| Protection category | IP65 |
| Connection | Screw terminals |
| cross-sectional area maximum | 2,50mm² / 14AWG |
| Cable entry | Rubber pinch |
| Cable entry minimum | d = 5 mm |
| Cable entry maximum | d = 7 mm |
| Type of fixing | Base mounting |
| Working temperature minimum | -20°C |
| Working temperature maximum | +45°C |
| Weight with packaging | 280 g |
| Product weight | 220 g |

| ELECTRICAL DATA | |
|---|---|
| Operating voltage | 24V |
| Operating voltage type | DC |
| Operating voltage tolerance | +/- 10% |
| Rated operational voltage | 24 VDC |
| Rated operational current | 300 mA |
| Rated inrush current | 12.000 mA |
| Protection class | Protection class 2 |
| Pollution degree | 3 |

| OPTICAL DATA | |
|---|---|
| Light source | Xenon |
| Light colour | Red |
| Optical signal image | Flash |
| Flash frequency | 1 Hz |
| Flash output | 5 J |
| Service life optical | 4 million flashes minimum |

| APPROVAL DATA | |
|---|---|
| Conforms with CE | Yes |
| WEEE | Yes |

! For additional installation and mounting information, refer to the appropriate user guide at www.werma.com. This printed copy is for information only and is subject to alteration.

Midi free-standing Beacons / Flash Light 828

# Flashing Beacon BM 24VDC RD

| | |
|---|---|
| Conform with ATEX-directive | No |
| Conforms with CCC | No |
| Conforms with UL | cULus |
| UL Type Rating | Type 12 |
| Conforms with FCC | No |
| Conforms with IC | No |
| EAC certificate available | Yes |
| Conforms with AS-I | No |
| ICAO Certification | No |
| Conforms with GL | No |
| Conforms with RoHS CN | No |
| Conforms with VdS | No |

## DRAWING

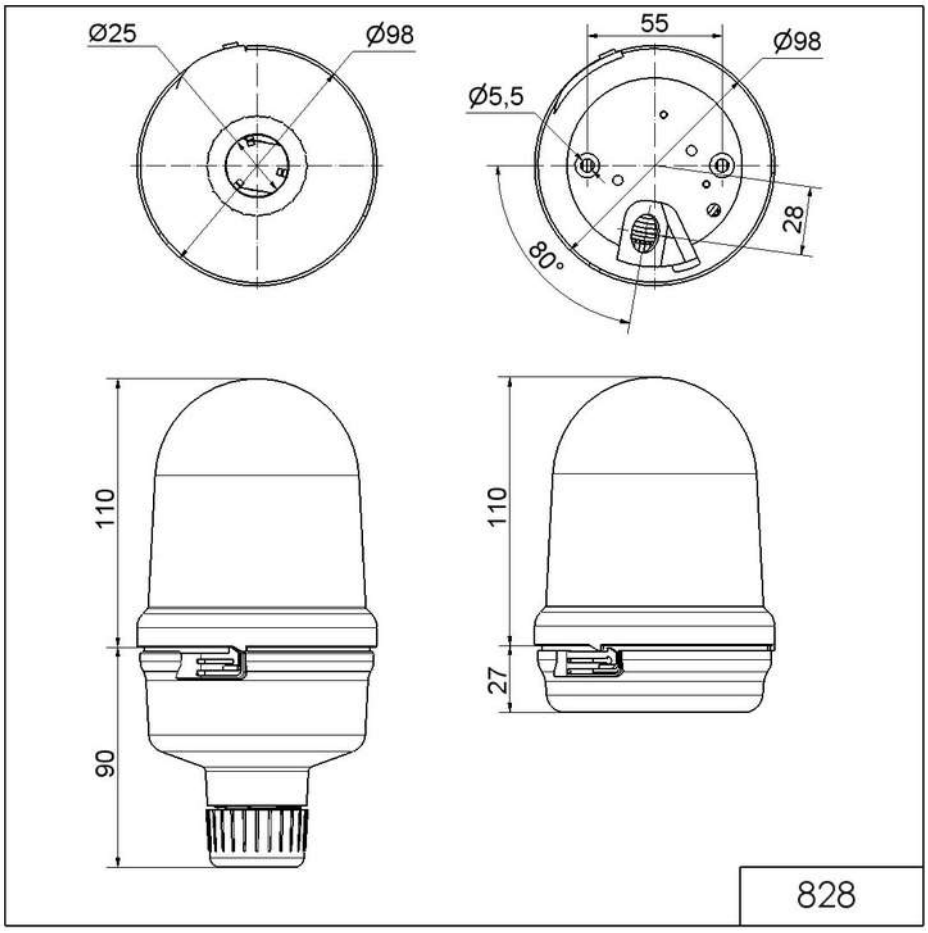


! For additional installation and mounting information, refer to the appropriate user guide at www.werma.com. This printed copy is for information only and is subject to alteration.