Technical datasheet



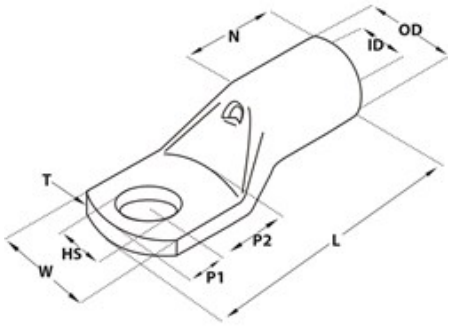

4-8

CABLE LUG KR 4.0mm2, M8

Product Properties:

Suitable for Class 2 conductor	Yes
Suitable for Class 5 conductor	Yes
Suitable for Class 6 conductor	Yes
Insulated	No
Max. current (Imax)	40 A
Number of mounting holes	1 .
Flange shape	Ring shape
Colour insulation	Other
Slender flange model	No
With sight-hole	Yes
Conductor category	Several
Max Temp	150 °C
Surface protection	Tinned
Material	Copper
Connecting angle	180° (horizontal)
Series	KR/KS (0.75-6mm2)

Dimensions:

HS	8.3 mm
ID	3 mm
OD	5 mm
T	1.2 mm
P1	5 mm

P2	7 mm
L	24 mm
N	6 mm
W	11.5 mm
MOQ	100 .
Unit	pcs
Bolt dimension (metric)	8 .
Nominal cross section	4 mm²

Approvals:

Approved according to CE	Yes
Approved according to DNV	Yes

Compliance:

Conflict Minerals	Yes, see report under tab "Documents"
Extended Minerals	N/A, contains no extended minerals
Iron and Steel Sanction	Compliance
PFAS	No PFAS
REACH	No SVHC (Latest. 21 Jan 2025)
RoHS	RoHS 3 (2015/863)
SCIP	Not Applicable
US TSCA	No (5 PBT Subs, Feb 2021)
ECCN (EU)	No CLASS
ECCN (US)	EAR99

Other information:

ETIM-Class	EC001051 - Tube cable lug for copper conductors
ETIM-Release	9.0
Trademark	NEMIQ
Product Group	Cable lugs
Alternative SKU	4-8

Logistic information:

Barcode	733117612091
Country of origin	SE
Item status	Stock item, normally in stock with reservation for in between sales.
MOQ	100 .
Stock code	4-8
Taric code	85369010
Unit	pcs

*We reserve the right to make technical changes and disclaim any typographical errors.