PRESSURE COMPENSATION DEVICE SNAP-IN

DA 284 | IP66





Photo: Inside view

> High degree of protection
> Waterproof membrane
> Easy to install due to snap-in action

In enclosures and housings with a high protection class, differential pressure happens due to internal and external temperature changes. In the event of negative pressure, dust and humidity can be drawn into the enclosure through the seals on the doors. This can cause condensation when the air in the enclosure cools down. The easy-to-fit DA 284 pressure compensation device enables pressure compensation with protection class IP66 (M12: IP66/IP68). Additionally, the watertight membrane inside the pressure compensation device allows humidity to escape from the cabinet at overpressure, while preventing water, humidity or dirt intrusion at under pressure.

TECHNICAL DATA

Mounting	Snap-In, mounting from outer side
Wall thickness	1 to 4 mm
Depth in enclosure	approx. 15 mm, according to wall thickness
Sealing	sealing gasket EPDM
Filter	waterproof membrane
Dimensions	Ø 70 x 33,5 mm
Fitting position	variable
Note	Material adheres to limit values in accordance with RoHS3

Installation: Make cut-out Ø 40+0,5 mm in enclosure wall for size M40. Attach pressure compensation element from the outer side of the enclosure (housing). Make sure that the hole is round and free of burrs. The sealing ring must be mounted on the outer side of the housing wall. Apply sufficient pressure so the five snap-in hooks fully engage. Snap-in pressure is easily adaptable to wall thickness of the enclosure.

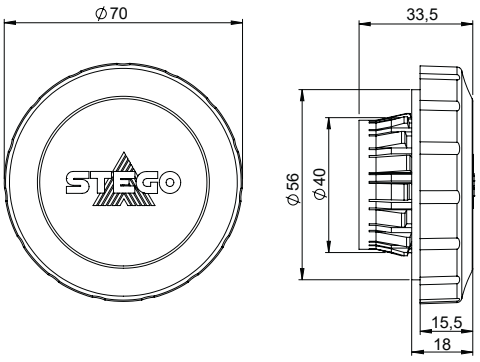

Art. No.	Material	Protection type	Air permeability[1]	Operating/Storage temperature	packing unit	Weight (approx.)	Approvals	
28420.0-00	plastic according to UL94 V-0, light grey; weather proof and UV light resistant according to UL746C (f1)	IP66 (EN 60529) / IPX9K (EN 40050-9)	2000 l/h	-35 to +70 °C (-31 to +158 °F)	1 piece	45 g	UL E234324	EAC

[1] at a pressure difference of min. 70 mbar

www.stego.de | www.stego.co.uk | www.stegonorden.se

24.02.2022 | Specifications are subject to change without notice. Errors and omissions excepted. Suitability of this product for its intended use and any associated risks must be determined by the end customer/buyer in its final application.