FEMALE END VIEW

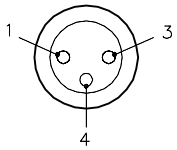

1 = BROWN
3 = BLUE
4 = BLACK

WIRING DIAGRAM

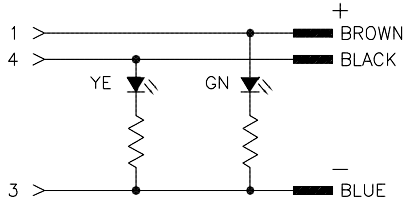

1 = VOLTAGE (+) (GREEN)
3 = COMMON (–)
4 = OUTPUT (YELLOW)

SPECIFICATIONS

CONTACT CARRIER MATERIAL	NYLON OR TPU
MOLDED HEAD MATERIAL/COLOR	ELASTO 1195A–10/CLEAR
CONTACT MATERIAL/PLATING	BRASS/GOLD
COUPLING NUT MATERIAL/PLATING	BRASS/NICKEL
RATED CURRENT [A]	4.0 A
RATED VOLTAGE [V]	10–30 VDC
OUTER CABLE JACKET MATERIAL/COLOR	PVC/YELLOW
CONDUCTOR INSULATION MATERIAL	PVC
NUMBER OF CONDUCTORS [AWG]	3x24 AWG
TEMPERATURE RANGE	–40°C to +105°C (–40°F to +221°F)
PROTECTION CLASS	MEETS NEMA 1,3,4,6P AND IEC IP67

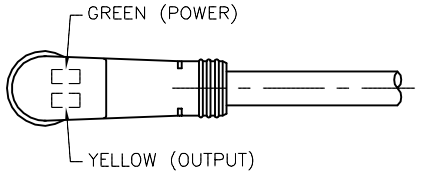

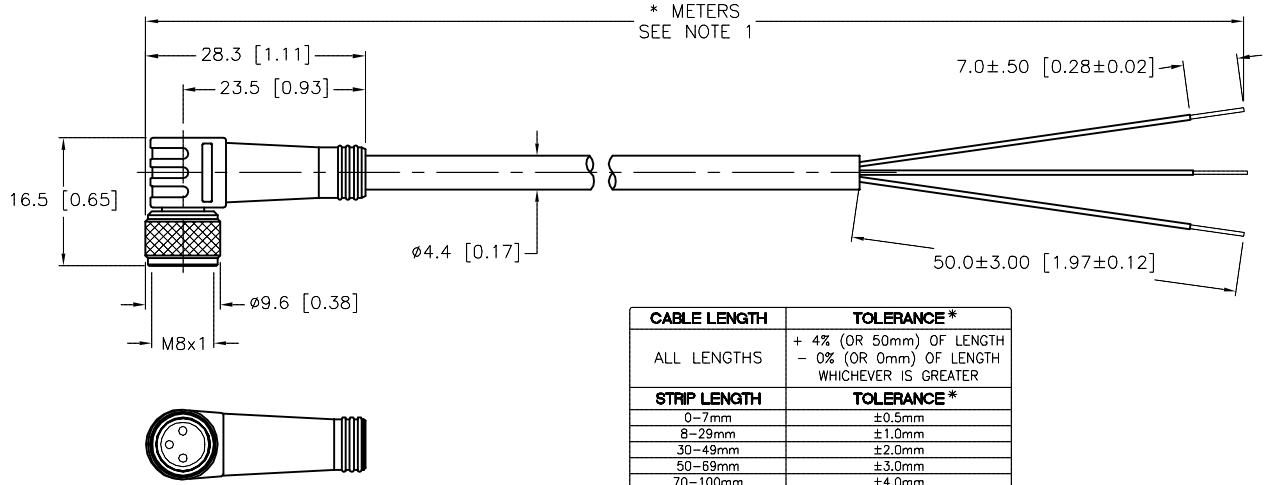

CABLE LENGTH	TOLERANCE *
ALL LENGTHS	+ 4% (OR 50mm) OF LENGTH – 0% (OR 0mm) OF LENGTH WHICHEVER IS GREATER
STRIP LENGTH	**TOLERANCE ***
0–7mm	±0.5mm
8–29mm	±1.0mm
30–49mm	±2.0mm
50–69mm	±3.0mm
70–100mm	±4.0mm
OVER 100mm	±5.0mm
* UNLESS OTHERWISE SPECIFIED	

SOURCE DRAWING – FOR REFERENCE ONLY

NOTES:

1. "*" INDICATES CABLE LENGTH IN METERS. CONTACT TURCK TO ORDER SPECIFIC LENGTHS.

2. STRIP AND TIN LENGTHS ARE FOR REFERENCE ONLY; SOME LENGTHS MAY NOT BE STRIPPED AND TINNED.

REV	DESCRIPTION	BY	DATE	ECO NO.
G	UPDATE VOLTAGE RATING SPECIFICATIONS	KMY	05/08/14	45639

RELATED DOCUMENTS
1.
2.
3.
4.

MATERIAL: SEE SPECIFICATIONS

FINISH: SEE SPECIFICATIONS

3RD ANGLE PROJECTION

ALL DIMENSIONS DISPLAYED ON THIS DRAWING ARE FOR REFERENCE ONLY

CONTACT TURCK FOR MORE INFORMATION

THIS DRAWING IS CONFIDENTIAL AND THE PROPERTY OF TURCK INC. USE OF THIS DOCUMENT WITHOUT WRITTEN PERMISSION IS PROHIBITED.

TURCK INC
High Technology Sensors and Automation Controls
3000 CAMPUS DRIVE
MINNEAPOLIS, MN 55441
1–800–544–7769
(763) 553–7300
(763) 553–0708 fax
turck.com

DRFT	DATE
CBM	04/26/99
APVD	SCALE
	1=1.0

UNIT OF MEASUREMENT
MILLIMETER [INCH]
DO NOT SCALE THIS DRAWING

DESCRIPTION: PKW 3M–P7X2–*

IDENTIFICATION NO.:

REV: G

FILE: 777000282

SHEET 1 OF 1

Approved 05/12/2014, work order #56409 by J.S.