NU 308 ECP

Popular item
SKF Explorer

Dimensions

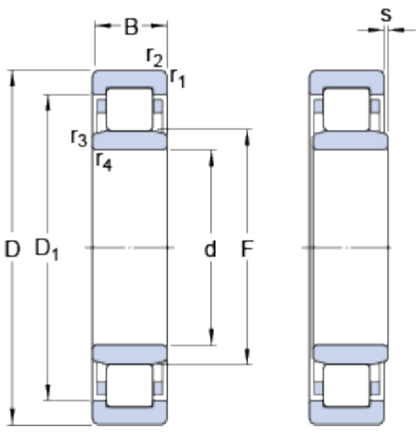

d		40	mm
D		90	mm
B		23	mm
D_1	≈	75.18	mm
F		52	mm
$r_{1,2}$	min.	1.5	mm
$r_{3,4}$	min.	1.5	mm
s	max.	1.4	mm

Abutment dimensions

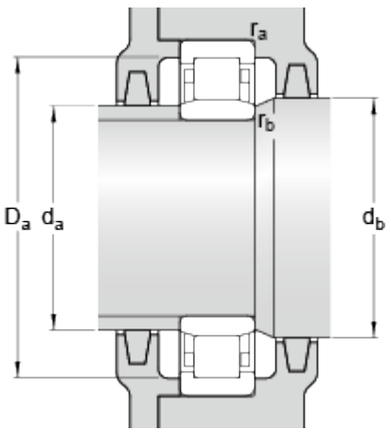

d_a	min.	48	mm
d_a	max.	50	mm
d_b	min.	54	mm
D_a	max.	81.8	mm
r_a	max.	1.5	mm
r_b	max.	1.5	mm

Calculation data

Basic dynamic load rating	C	93	kN
Basic static load rating	C_0	78	kN
Fatigue load limit	P_u	10.2	kN
Reference speed		8000	r/min
Limiting speed		9500	r/min
Calculation factor	k_r	0.15	
Limiting value	e	0.2	
Axial load factor	Y	0.6	

Mass

Mass bearing	0.65	kg

Associated products

Angle ring	HJ 308 EC