PRODUCT DETAILS
ARTICLE: 35214FR

WHEEL AS 125X40/40 XRB SWL X20L +BR



Wheel series AS

Wheels with cast soft polyurethane coating 87 Sh.A on polyamide 6 center.
Wheel fitted with stainless steel roller bearing.

Castor series INOX20

Inox20 series, polished stainless steel forks, swivels with double ball races.
Trailing foot brake - total stop.

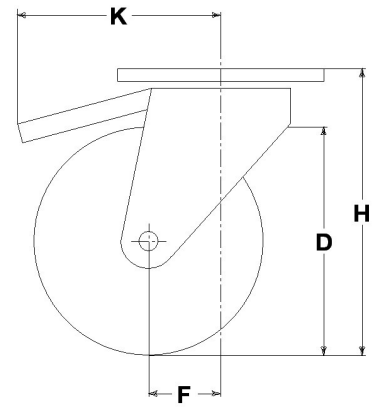

Technical data

Wheel diameter	D	125 mm
Tyre width	E	40,0 mm
Bore diameter	d	15 mm
Weight article		1,340 kg
Hub width	L	40 mm
Overall height	H	159 mm
Top plate outer dimensions	AxB	102x83 mm
Bolt hole spacing	axb	80x60 mm
Fixing bolt diameter	g	M8
Offset	F	49 mm
Fork width	U	50 mm
Load Capacity		250 kg

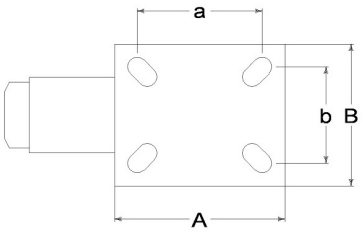

Related Articles

Spare part wheel: 35066X
Basic version: 35214

GENERAL INFORMATION / RECOMMENDATIONS AND WARNINGS
The cited text and the complete catalogue in their most up-dated versions are available in the OEM's website page www.lagspa.it/downloads. The dimensions, descriptions, specifications and illustrations herein are indicative and subject to variations without notice. The fact that products are illustrated herein does not necessarily imply they are available from stock nor does it place us under any obligation to supply them.
Tests carried out refer to the original products with original accessories: the replacement of one of the components with others of different manufacture might prevent the same results from being achieved and will automatically invalidate any guarantee. Please contact our technical service concerning any special application.