PyroCouple

Compact Non-Contact Temperature Sensor with optional Dual Output



- Temperature range: -20°C to 500°C
- Emissivity setting: fixed at 0.95
- Two-wire 4-20 mA output or four-wire voltage/thermocouple output
- Four-wire unit also provides internal sensor temperature
- Field of view: 2:1, 15:1, 30:1 or close focus
- Fast response with high stability
- Stainless steel housing, sealed to IP65
- Quick and easy installation
- Optional air/water cooled housing, air purge collar, laser sighting tool and mounting brackets

Two-wire units (option 0)

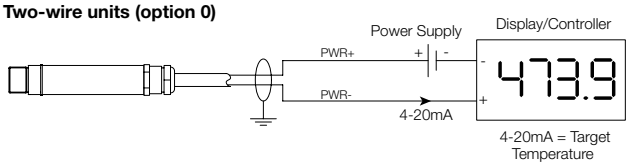

Four-wire units (options 1 to 4)

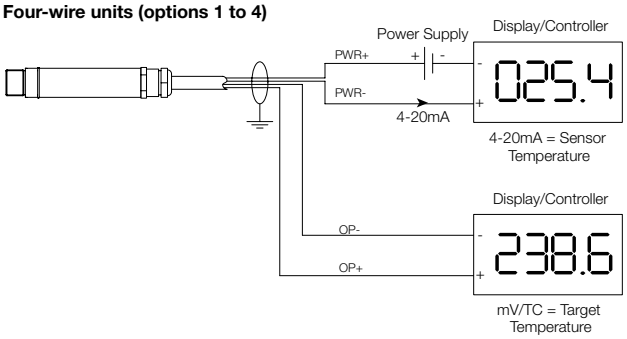

The PyroCouple Series is a range of high quality, low cost, compact sensors which measure the temperature of inaccessible or moving objects and materials. They measure temperatures from -20°C to 500°C, accurately and consistently, with an outstanding response time of 240 ms.

Two-wire PyroCouple sensors transmit the target temperature as a 4-20 mA output and offer a simple solution for most non-contact temperature measurement applications.

Four-wire PyroCouple sensors transmit the target temperature as a 0-50 mV or thermocouple output (type J, K or T) plus the internal sensor temperature as a 4-20 mA output. This second output can be used to ensure that the sensor is being operated within the correct ambient temperature limits and prevent damage caused by overheating or overcooling. It can also be used to give an approximate indication of the air temperature surrounding the sensor.

DIAMETER OF TARGET SPOT MEASURED VERSUS DISTANCE FROM SENSING HEAD

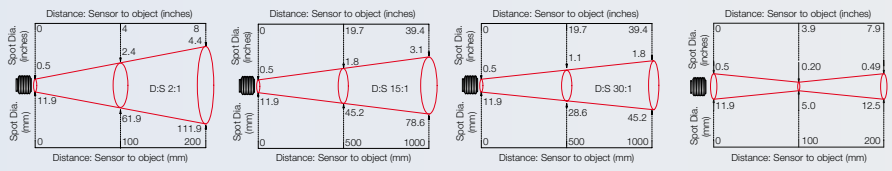

All PyroCouple sensors are fitted with precision Germanium lenses for accurate optics. Model PC21 has 2:1 optics making it suitable for most applications where the sensor can be mounted close to the target. Model PC151 is designed for small or distant targets and has an optical resolution of 15:1. Model PC301 is designed for very small or distant targets and has an optical resolution of 30:1. Model PCCF is designed for targets as small as ø5mm at a distance of 100mm from the sensor.

CALEX ELECTRONICS LIMITED

GENERAL SPECIFICATIONS

Temperature Range vs Field-of-View table

Field of View	-20ºC to 100ºC	0ºC to 250ºC	0ºC to 500ºC
2:1	PC21LT-x	PC21MT-x	-
15:1	PC151LT-x	PC151MT-x	PC151HT-x
30:1	PC301LT-x	PC301MT-x	PC301HT-x
ø5mm @ 100mm	PCCFLT-x	PCCFMT-x	PCCFHT-x

Note: -x denotes the output type, see table below

Output table

Model-X	Target Temperature Output	Sensor Temperature Output
-0	4-20 mA	Not available
-1	0-50 mV	4-20 mA
-2	Type T thermocouple	4-20 mA
-3	Type J thermocouple	4-20 mA
-4	Type K thermocouple	4-20 mA

e.g. Model PC151HT-4 has a 15:1 field of view and provides a type K thermocouple output representing target temperatures of 0ºC to 500ºC plus a 4-20 mA output proportional to internal sensor temperature. **For simplicity, the sensor temperature range is always set the same as the target temperature range**

Accuracy	±1% of reading or ±1ºC whichever is greater
Repeatability	± 0.5% of reading or ± 0.5ºC whichever is greater
Emissivity	Fixed at 0.95
Response Time, t_{90}	240 ms (90% response)
Spectral Range	8 to 14 µm
Supply Voltage	24 V DC (28 V DC max.)
Min. Sensor Voltage	6 V DC
Max. Loop Impedance	900 Ω (4-20 mA output)
Output Impedance	56 Ω (voltage/thermocouple output)

MECHANICAL

Construction	Stainless Steel
Dimensions	18 mm diameter x 103 mm long
Thread Mounting	M16 x 1 mm pitch
Cable Length	1m (longer lengths available to order)
Weight with Cable	95 g

ENVIRONMENTAL

Environmental Rating	IP65
Ambient Temperature Range	0ºC to 70ºC
Relative Humidity	95% max. non-condensing

MODEL NUMBERS

PCxxx xx-x xx

Cooling
(blank) = Sensor without cooling
WJ = Air/water cooled jacket with air purge collar

Output option
0 = 2 wire, 4-20mA
1 = 4-wire, 0-50mV (target temp.), 4-20mA (sensor temp.)
2 = 4-wire, T Thermocouple (target temp.), 4-20mA (sensor temp.)
3 = 4-wire, J Thermocouple (target temp.), 4-20mA (sensor temp.)
4 = 4-wire, K Thermocouple (target temp.), 4-20mA (sensor temp.)

Temperature range
LT = -20 to +100 ºC
MT = 0 to 250 ºC
HT = 0 to 500 ºC (not normally available on PC21 models)

Field of view
21 = 2:1 divergent optics
151 = 15:1 divergent optics
301 = 30:1 divergent optics
CF = Close-focus optics (focal spot size 5 mm at 100mm distance)

ACCESSORIES

FIXED MOUNTING BRACKET



The L-shaped fixed mounting bracket offers a rigid support for the sensor and allows fine adjustment in a single plane.

ADJUSTABLE MOUNTING BRACKETS



The adjustable mounting bracket consists of a fixed mounting bracket plus another L-shaped bracket. When assembled as shown the adjustable mounting bracket offers a rigid support for the sensor and allows fine adjustment in two planes.

AIR PURGE COLLAR



The air purge collar is used to keep dust, fumes, moisture and other contaminants away from the lens. Air flows into the fitting on the side and out of the aperture at the front.

AIR/WATER COOLED HOUSING



The air/water cooled housing allows the sensor to withstand ambient temperatures which exceed the normal 70°C limit. Air or water (depending on the degree of cooling required) flows into one of the fittings on the side and out of the other. To prevent condensation forming on the lens, the air/water cooled housing is supplied complete with an air purge collar. Please note, the air/water cooled housing must be ordered with the sensor and cannot be fitted by the user.

LASER SIGHTING TOOL



The Laser Sighting Tool screws onto the front of the sensor during installation and indicates precisely where the sensor is aiming. Once the sensor has been aimed at the centre of the target and locked in position the Laser Sighting Tool can be removed. The laser is activated by means of a push button on the front of the tool which has a latching mechanism.

Calex Electronics Limited
PO Box 2, Leighton Buzzard, Bedfordshire, England LU7 4AZ
Tel: +44 (0)1525 373178/853800 Fax: +44 (0)1525 851319 Lo-call Tel: 0845 3108053
E-mail: mail@calex.co.uk Online: http://www.calex.co.uk

Issue D - March 14
Specifications subject to change without notice