E40514

Process adapter SMS 1145

ADAPT SMS1145 DN65

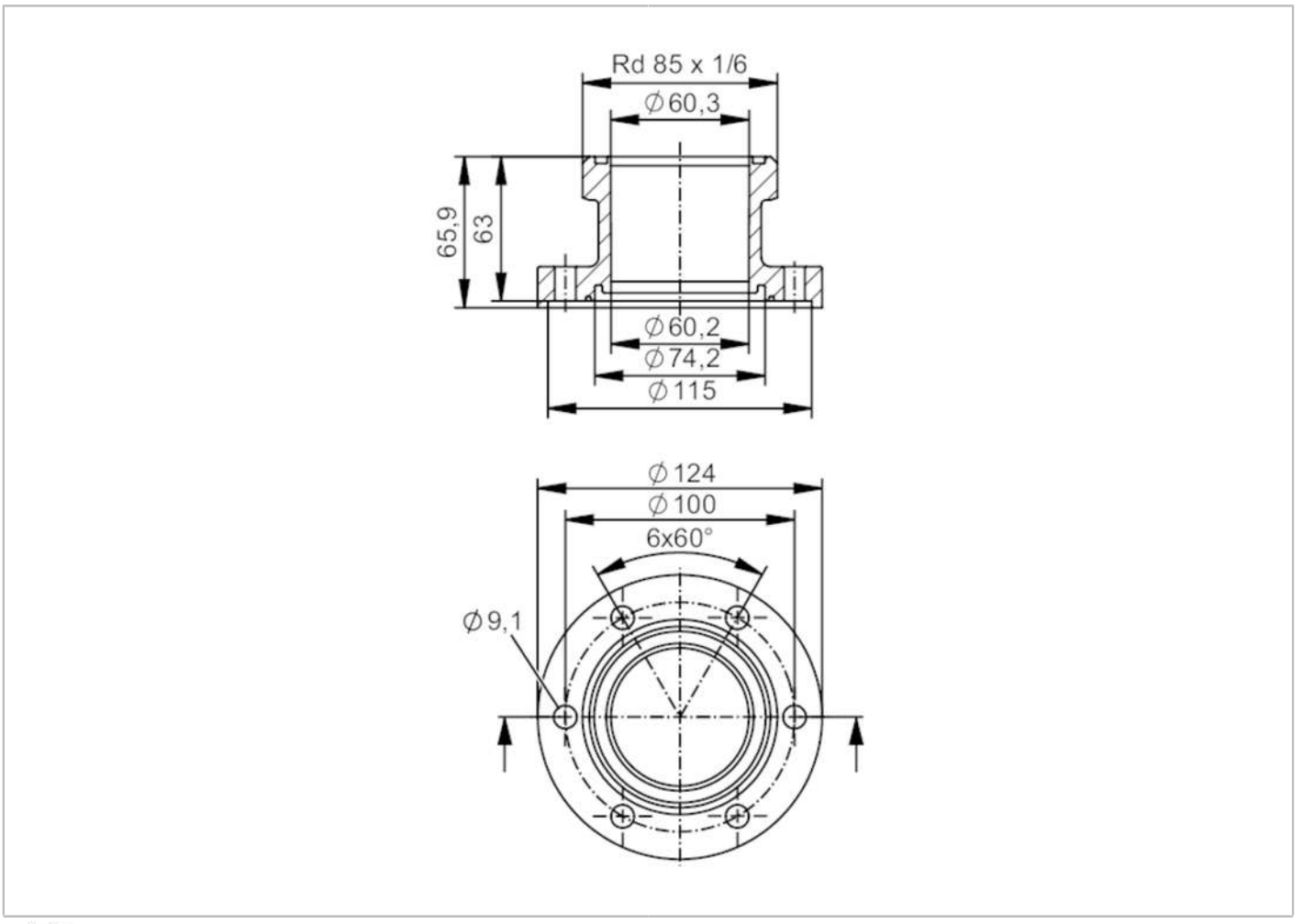

EC 1935/2004 FCM

Application			
Design		for volumetric flow meters SMF	
Application		food and beverage industry; hygienic systems	
Pressure rating		16 bar	1.6 MPa
Tests / approvals			
Pressure Equipment Directive		A possible classification to PED depends on the application and has to be carried out by the user / operator.	
Safety instructions		The compatibility between medium and product material has to be checked in all applications.	
Mechanical data			
Weight	[g]	4521.1	
Materials		stainless steel (316L/1.4404)	
Nominal diameter		DN65 (2 1/2“)	
Sensor connection		ifm-specific device flange	
Process connection		SMS 1145	
Process connection suitable for pipe standard		(DIN EN 10357 series A); (DIN 11866 series A); (BS 4825 Part 1)	
Surface characteristics Ra/Rz of the wetted parts		Ra ≤ 0.4 µm	

E40514

Process adapter SMS 1145

ADAPT SMS1145 DN65

Accessories	
Items supplied	screws 12
Remarks	
Pack quantity	2 pcs.