Brand of NTN corporation

Technical data

ESFLE209

Bearing units



Grey cast housing, radial insert ball bearing with eccentric locking collar, single lip seal

KIT CONTENT

ES209G2, FLE209

VISUAL (S)

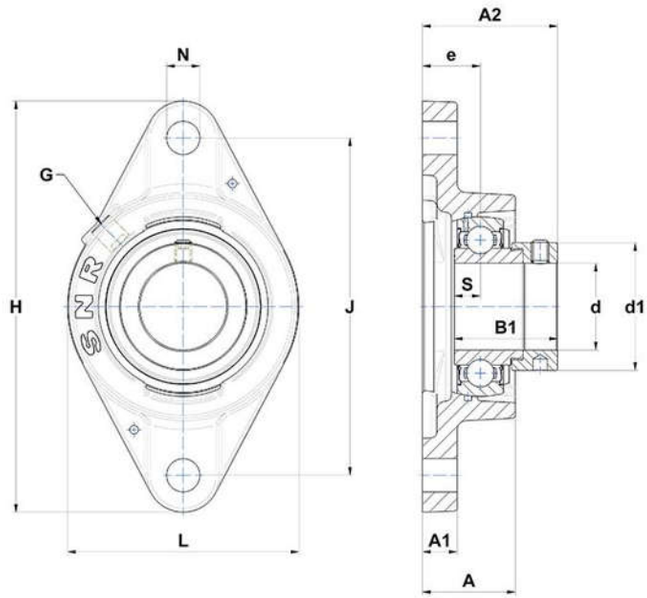

PRODUCT DEFINITION

Brand	SNR
A - Housing height	37,5 mm
A1 - Housing foot height / flange height	13 mm
A2 - Total height from mounting surface	56,7 mm
B - Width of Inner Ring	30,2 mm
B1 - Overall width Inner Ring	43,7 mm

ESFLE209
Bearing units

PRODUCT DEFINITION	
d - Shaft diameter	45 mm
d1 - Outer dia of eccent. Lock. collar / nut of adapter sleeve	62 mm
e - Distance mounting surface to bearing center	24 mm
G - Grease fitting	R1/8"
H - Housing length, width or diameter	180 mm
J - Mounting holes distance	148,5 mm
L - Housing width / diameter	111 mm
N - Mounting hole dimension	14 mm
S - Distance front side/bearing centre	11 mm

PRODUCT PERFORMANCE	
C - Dynamic load rating	31850000 mN
C0 - Static load rating	20800000 mN
Operating temperature min.	253,15 °K
Operating temperature max.	373,15 °K

OTHER FEATURES	
Mass	1,79 kg
Recommended tightening torque for set screw	11.5 N-m