Current Transducer HTB 50 ... 400-P and HTB 50 ... 100-TP

I_{PN} = 50 ... 400 A

For the electronic measurement of currents: DC, AC, pulsed..., with galvanic separation between the primary circuit and the secondary circuit.

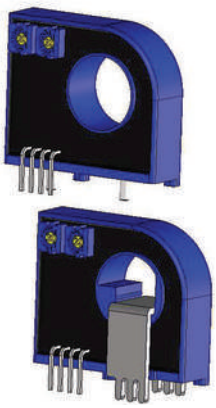

Electrical data

Primary nominal RMS current I_{PN} (A)	Primary current measuring range I_{PM} (A)	Type
±50	±150	**HTB 50-P, HTB 50-TP** [1]
±100	±300	**HTB 100-P, HTB 100-TP** [1]
±150	±450	**HTB 150-P**
±200	±500	**HTB 200-P**
±300	±600	**HTB 300-P**
±400	±600	**HTB 400-P**

U_{out}	Output voltage (Analog) @ $\pm I_{PN}$, R_L = 10 kΩ, T_A = 25 °C	±4	V
R_{out}	Output internal resistance	100	Ω
R_{INS}	Insulation resistance @ 500 V DC	> 500	MΩ
R_L	Load resistance	> 10	kΩ
U_C	Supply voltage (±5 %) [1]	±12 … 15	V
I_C	Current consumption	15	mA

Accuracy - Dynamic performance data

ε	Error @ I_{PN}, T_A = 25 °C (excluding offset)	< ±1	%
ε_L	Linearity error (0 … $\pm I_{PN}$)	< ±1	%
U_{OE}	Electrical offset voltage @ T_A = 25 °C	< ±30	mV
U_{OH}	Hysteresis offset voltage @ I_P = 0, after an excursion of 1 × I_{PN}	< ±1	%
TCU_{OE}	Temperature coefficient of U_{OE} HTB 50-P or TP	< ±2	mV/K
	HTB 100-P/TP to HTB 400-P	< ±1	mV/K
TCU_{out}	Temperature coefficient of U_{out} (% of reading)	< ±0.1	%/K
$t_{D\,90}$	Delay time to 90 % of the final output value for I_{PN} step	< 3	µs
BW	Frequency bandwidth (−3 dB) [3]	DC … 50	kHz

General data

T_A	Ambient operating temperature	−40 ... +80	°C
$T_{A\,st}$	Ambient storage temperature	−40 ... +85	°C
m	Mass	< 30 for -P	g
		< 36 for -TP	
	Standards	EN 50178: 1997	

2 pins of ⌀ 2 mm are available on transducer for PCB.

Notes: [1] TP version is equipped with a primary busbar
[2] Operating at ±12 V ≤ U_C < ±15 V will reduce the measuring range
[3] Derating is needed to avoid excessive core heating at high frequency.

Features

- Hall effect measuring principle
- Galvanic separation between primary and secondary circuit
- Insulation voltage 2500 V
- Low power consumption
- Wide power supply ±12 … 15 V
- Primary busbar option for 50 A and 100 A version for ease of conection
- Insulating plastic case recognized according to UL 94-V0.

Advantages

- Small size and space saving
- Only one design for wide current rating range
- High immunity to external interference.

Applications

- AC variable speed drives and servo motor drives
- Static converters for DC motor drives
- Battery supplied applications
- Uninterruptible Power Supplies (UPS)
- Switched Mode Power Supplies (SMPS)
- Power supplies for welding applications.

Application domain

- Industrial.

22June2021/version 13

LEM reserves the right to carry out modifications on its transducers, in order to improve them, without prior notice

LEM International SA
Chemin des Aulx 8
1228 PLAN-LES-OUATES Switzerland
www.lem.com

Current Transducer HTB 50 ... 400-P and HTB 50 ... 100-TP

Insulation coordination

U_d	Rms voltage for AC insulation test, 50 Hz, 1 min	2.5	kV
U_e	Partial discharge extinction rms voltage @ 10 pC	> 500	V
U_{Ni}	Impulse withstand voltage 1.2/50 µs	4	kV
d_{Cp}	Creepage distance	> 4.5	mm
d_{Cl}	Clearance	> 4.5	mm
CTI	Comparative Tracking Index (group IIIa)	275	

Applications examples

According to EN 50178 and IEC 61010-1 standards and following conditions:

- Over voltage category OV 3
- Pollution degree PD2
- Non-uniform field

	EN 50178	IEC 61010-1
d_{Cp}, d_{Cl}, U_{Ni}	Rated insulation voltage	Nominal voltage
Basic insulation	300 V	300 V
Reinforced insulation	150 V	150 V

Safety

This transducer must be used in limited-energy secondary circuits according to IEC 61010-1.



This transducer must be used in electric/electronic equipment with respect to applicable standards and safety requirements in accordance with the manufacturer's operating instructions.



Caution, risk of electrical shock

When operating the transducer, certain parts of the module can carry hazardous voltage (eg. primary busbar, power supply). Ignoring this warning can lead to injury and/or cause serious damage.
This transducer is a build-in device, whose conducting parts must be inaccessible after installation.A protective housing or additional shield could be used.
Main supply must be able to be disconnected.

22June2021/version 13

LEM reserves the right to carry out modifications on its transducers, in order to improve them, without prior notice

LEM International SA
Chemin des Aulx 8
1228 PLAN-LES-OUATES Switzerland
www.lem.com

Dimensions HTB 50 ... 400-P and HTB 50 ... 100-TP (in mm)

HTB 50 ... 400-P

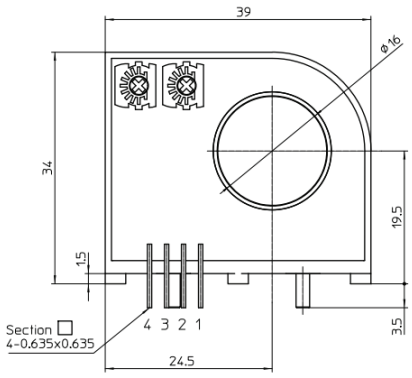

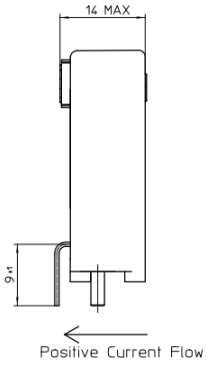

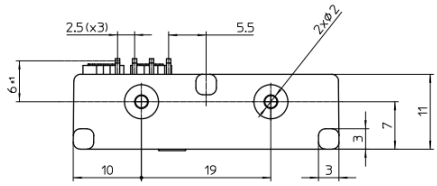

Secondary Pin Identification

1	$+U_c$
2	$-U_c$
3	Output
4	0 V

HTB 50 ... 100-TP

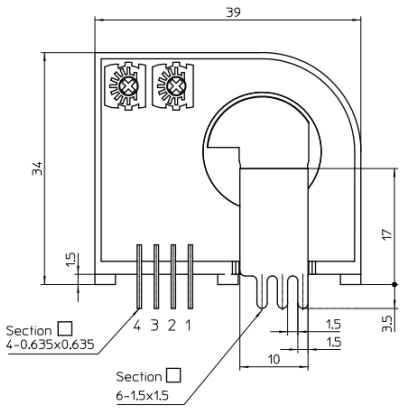

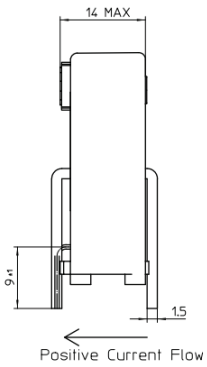

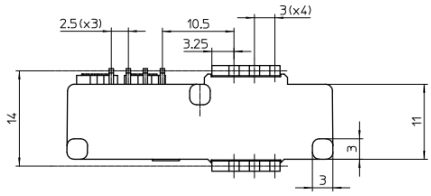

Mechanical characteristics

• General tolerance	±0.5 mm
• Primary through-hole	⌀ 16 mm
• Connection of secondary	4 pins 0.635 mm × 0.635 mm

Remarks

- I_S is positive when I_P flows in the direction of the arrow.
- Temperature of the primary conductor should not exceed 100 °C.
- Installation of the transducer must be done unless otherwise specified on the datasheet, according to LEM Transducer Generic Mounting Rules. Please refer to LEM document N°ANE120504 available on our Web site: **Products/Product Documentation.**
- Dynamic performances (di/dt and response time) are best with a single bar completely filling the primary hole.

22June2021/version 13

LEM reserves the right to carry out modifications on its transducers, in order to improve them, without prior notice

LEM International SA
Chemin des Aulx 8
1228 PLAN-LES-OUATES Switzerland
www.lem.com