Brand of NTN corporation

Technical data

USEHE210

Bearing units



Grey cast housing, radial insert ball bearing with socket set screws, single lip seal

KIT CONTENT

US210G2, EHE210

VISUAL (S)

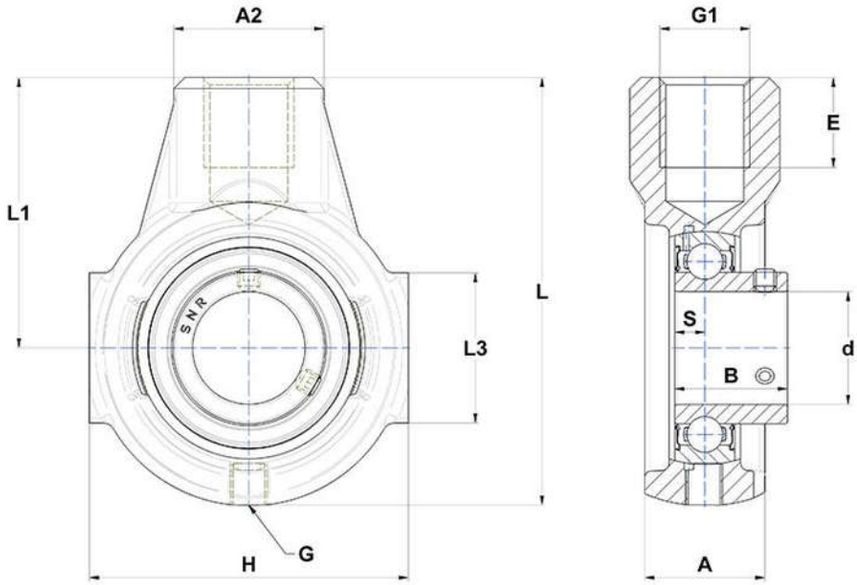

PRODUCT DEFINITION

Brand	SNR
A - Housing width	40 mm
A2	40 mm
B - Width of Inner Ring	43,5 mm
d - Shaft diameter	50 mm
E - Mounting hole thread depth	24 mm

NTN Europe
1 rue des Usines · BP 2017 · 74010 Annecy Cedex · France · Tel. +33 (0)4 50 65 30 00
S.A. au capital de 322 639 919 € · RCS ANNECY B 325 821 072 · Id. Fiscale : FR 48 325 821 072
SIRET 325 821 072 00015 · Code APE 2815 Z · Code NACE 28.15

PRODUCT DEFINITION	
G - Grease fitting	R1/8"
G1 - Thread size	M24
H - Housing length, width or diameter	110 mm
L - Housing length	145 mm
L1 - Distance attachment end face to bearing centerline	90 mm
L3 - Length of guidance slot/face	46 mm
S - Distance front side/bearing centre	10,9 mm

PRODUCT PERFORMANCE	
C - Dynamic load rating	35100000 mN
C0 - Static load rating	23200000 mN
Operating temperature min.	253,15 °K
Operating temperature max.	373,15 °K

OTHER FEATURES	
Mass	1,76 kg
Recommended tightening torque for set screw	11.5 N-m