E20790

Mounting set for photoelectric sensors

MOUNTING SET OL SMALL ROD

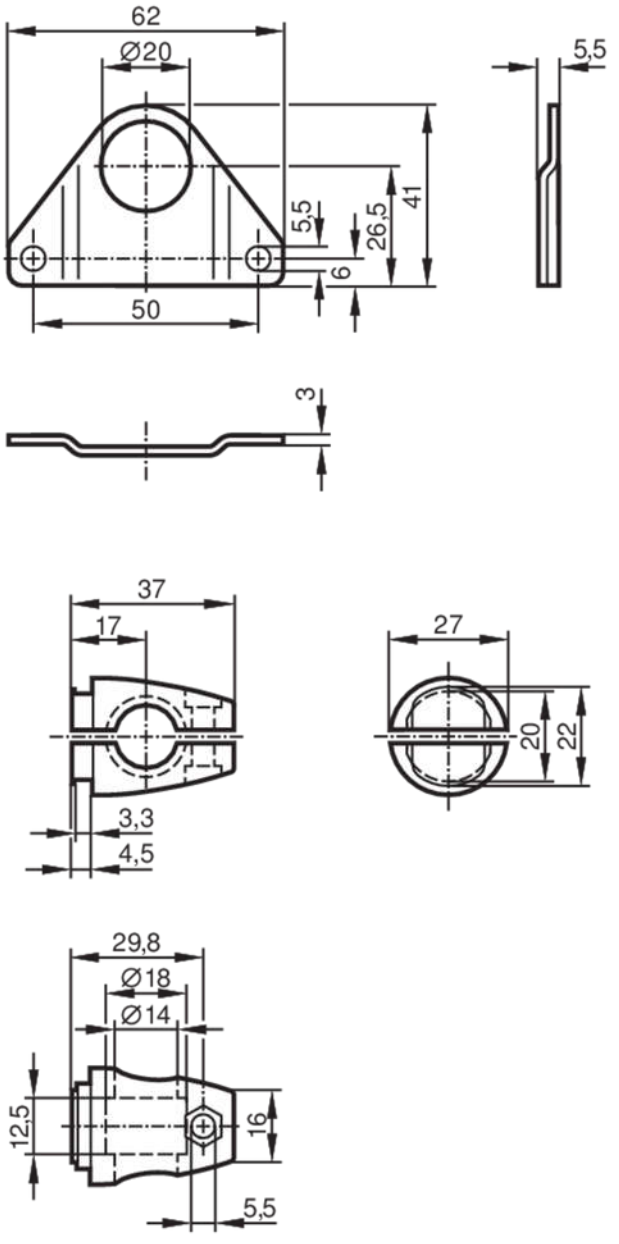

Application		
Design		clamp mounting
Mechanical data		
Weight	[g]	133
Type of mounting		Mounting rod; (Ø 14 mm)
Materials		fixture: stainless steel (1.4305 / 303); Clamp: diecast zinc
Remarks		
Pack quantity		1 pcs.