Top View of Assembly

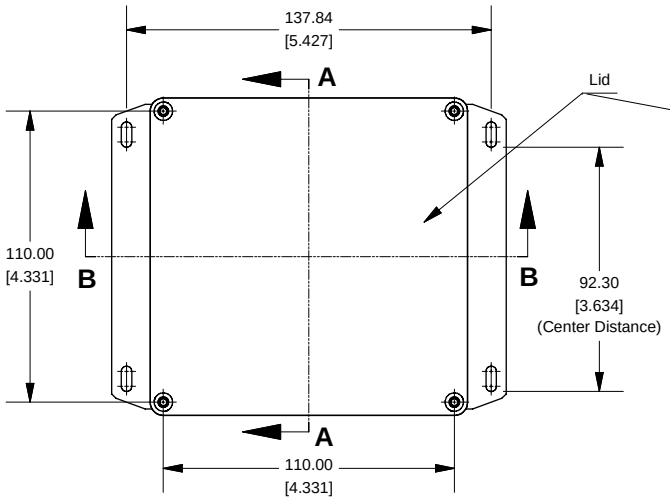

SECTION A-A
Side View of Assembly

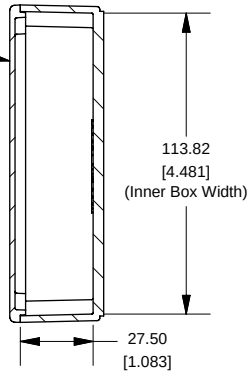

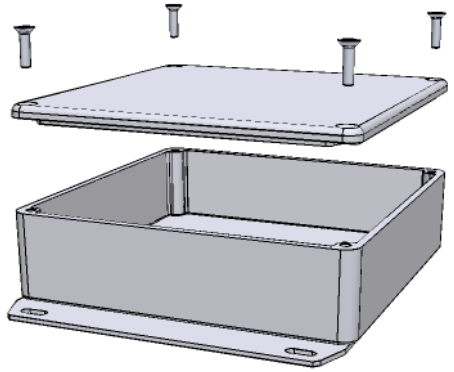

SECTION B-B
End View of Assembly

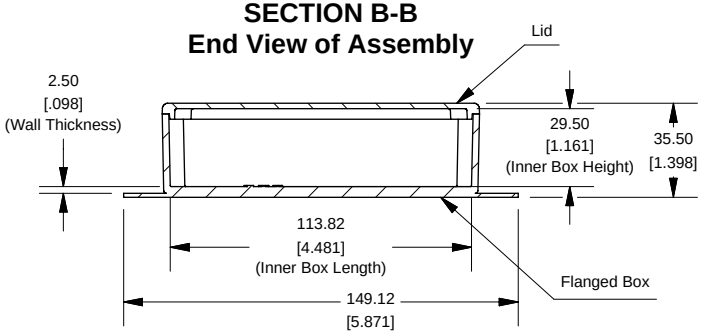

Top View Looking Inside Box

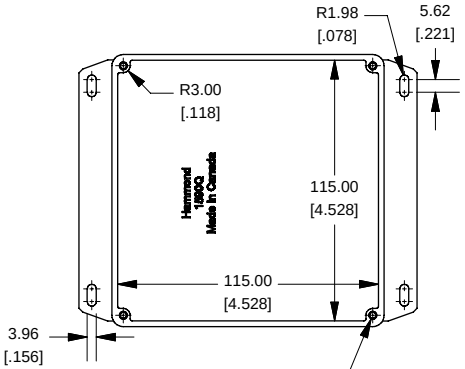

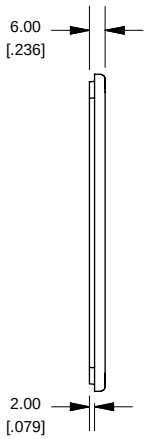

Lid

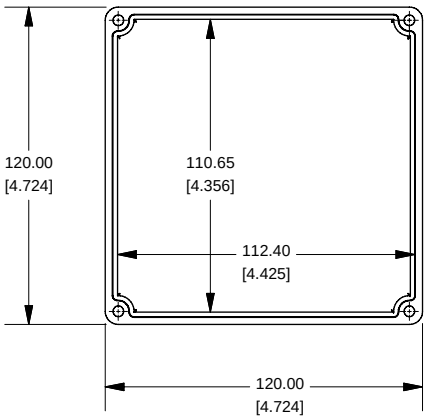

Enclosures can be Factory Modified (Milling, Drilling, Printing etc.)
Contact Factory mjm@hammondmfg.com for quotes
Solid models of this enclosure available in STEP or IGES.

NOTE
Purchased assembly includes box, lid and 4 cover screws.
Box and lid are made from Diecast Aluminum Alloy (alloy type 380).
Silicone Gasket Loctite #5950
Bottom Flange is Welded

PART NUMBERS	
1590QF Enclosure	
Unfinished	1590QF
Grey Textured Polyester Powder Paint - RAL 7038	1590QFGY
Black Textured Polyester Powder Paint - RAL 9011	1590QFBK
1590QF Liquid Resistant Enclosure (Silicon Factory Installed Gasket)	
Unfinished	1590WQF
Black Textured Powder Paint	1590WQFBK
ACCESSORIES	
Recommended Torque: 75 ozf.in / 55 cN.m	
Black Textured Cover Screws (Pkg 50) [6-32 x 1/2" SS Type 304]	1590WMS100BK
Unfinshed Cover Screws (Pkg 100) [6-32 x 1/2" Nickel Plated Screws]	1590WMS100
Standard Cover Screws	
Unfinshed Cover Screws (Pkg 100) [6-32 x 1/2" Nickel Plated Screws]	1590MS100
Black Textured Cover Screws (Pkg 50) [6-32 x 1/2" SS Type 304]	1590MS100BK

HAMMOND MANUFACTURING™

1590QF

www.hammondmfg.com