PA9021

Pressure transmitter with ceramic measuring cell

PA-250-SBR14-B-DVG/US/V

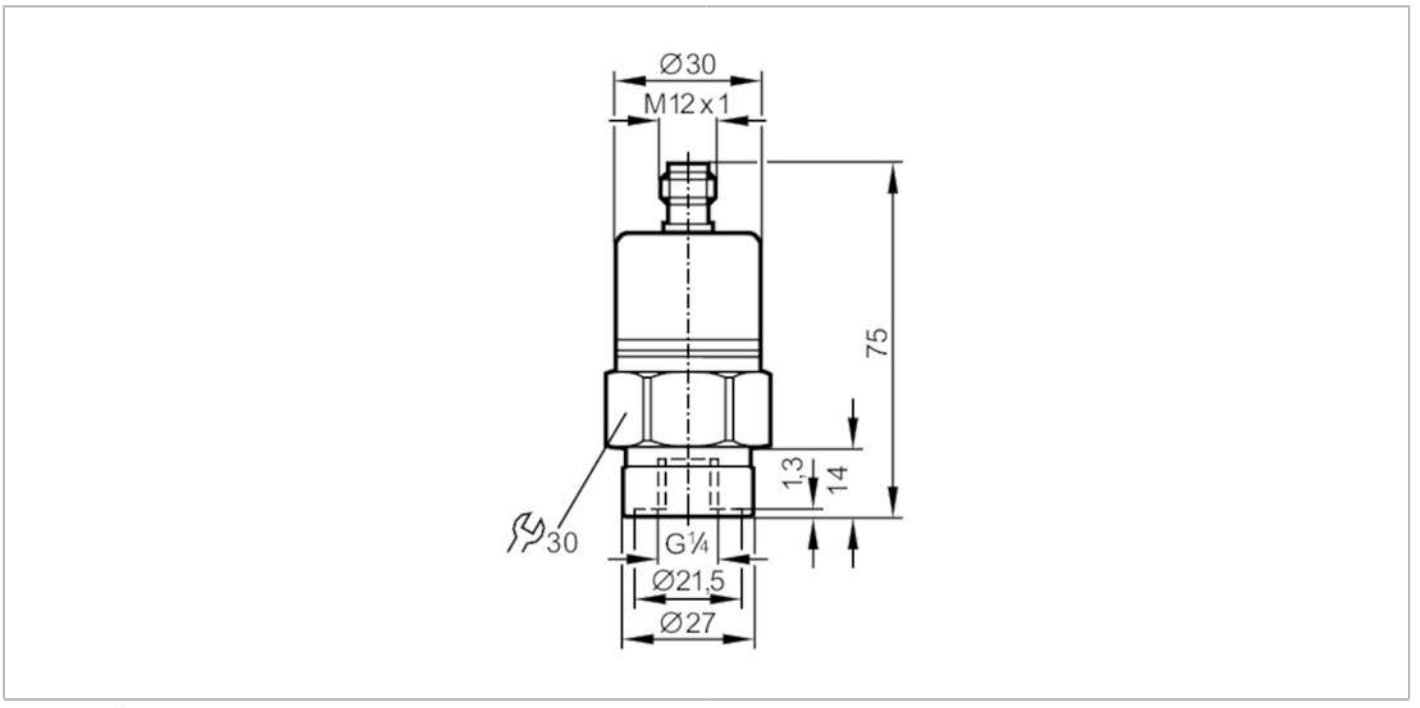

Product characteristics				
Number of inputs and outputs		Number of analogue outputs: 1		
Measuring range		0...250 bar	0...3625 psi	0...25 MPa
Process connection		threaded connection G 1/4 internal thread		
Application				
Special feature		Gold-plated contacts		
Application		for industrial applications		
Media		liquids and gases		
Conditionally suitable for		use in gases at pressures > 25 bar only on request		
Medium temperature	[°C]	-25...90; (on request: -40...90 °C)		
Min. bursting pressure		850 bar	12300 psi	85 MPa
Pressure rating		400 bar	5800 psi	40 MPa
Type of pressure		relative pressure		
Electrical data				
Operating voltage	[V]	16...32 DC		
Current consumption	[mA]	< 18		
Min. insulation resistance	[MΩ]	100; (500 V DC)		
Protection class		III		
Reverse polarity protection		yes		
Inputs / outputs				
Number of inputs and outputs		Number of analogue outputs: 1		
Outputs				
Total number of outputs		1		
Output signal		analogue signal		

PA9021

Pressure transmitter with ceramic measuring cell

PA-250-SBR14-B-DVG/US/V

Number of analogue outputs		1		
Analogue voltage output	[V]	0...10		
Min. load resistance	[Ω]	2000		
Overload protection		yes		
Measuring/setting range				
Measuring range		0...250 bar	0...3625 psi	0...25 MPa
Accuracy / deviations				
Repeatability	[% of the span]	< 0,1; (with temperature fluctuations < 10 K)		
Characteristics deviation	[% of the span]	< ± 0,25 (BFSL) / < ± 0,5 (LS); (BFSL = Best Fit Straight Line; LS = limit value setting)		
Long-term stability	[% of the span]	< ± 0,05; (per 6 months)		
Temperature coefficient zero point	[% of the span / 10 K]	0,1; (0...80 °C)		
Temperature coefficient span	[% of the span / 10 K]	0,2; (0...80 °C)		
Response times				
Step response time analogue output	[ms]	3		
Operating conditions				
Ambient temperature	[°C]	-25...80		
Storage temperature	[°C]	-40...100		
Protection		IP 68; IP 69K		
Tests / approvals				
EMC		EN 61000-4-2 ESD	4 kV CD / 8 kV AD	
		EN 61000-4-3 HF radiated	30 V/m	
		EN 61000-4-4 Burst	2 kV	
		EN 61000-4-6 HF conducted	10 V	
		radiation of interference	according to the automotive directive 2004/104/EC	
		CISPR 25		
		immunity	according to the automotive directive 2004/104/EC	
		ISO 11452-2 HF radiated	100 V/m	
		ISO 7637-2 pulse	severity level 4	
Shock resistance		DIN EN 60068-2-27	50 g (11 ms)	
		DIN EN 61373	category 3	
Vibration resistance		DIN EN 60068-2-6	20 g (10...2000 Hz)	
		DIN EN 61373	category 2	
MTTF	[years]	478		
UL approval		UL Approval no.	J008	
Pressure Equipment Directive		Sound engineering practice; can be used for group 2 fluids; group 1 fluids on request		
Railway applications		DIN EN 50155 / IEC 60571	Klasse T3, C1, S1	
Mechanical data				
Weight	[g]	224		
Housing		cylindrical		

PA9021

Pressure transmitter with ceramic measuring cell

PA-250-SBR14-B-DVG/US/V

Dimensions	[mm]	Ø 30 / L = 75
Materials		stainless steel (316L/1.4404); FKM; PA; EPDM/X
Materials (wetted parts)		stainless steel (303/1.4305); ceramics; FKM
Min. pressure cycles		100 million
Process connection		threaded connection G 1/4 internal thread
Restrictor element integrated		no (can be retrofitted)

Remarks

Pack quantity	1 pcs.

Electrical connection

Connector: 1 x M12; coding: A; Contacts: gold-plated



Connection

