WIRING DIAGRAMS

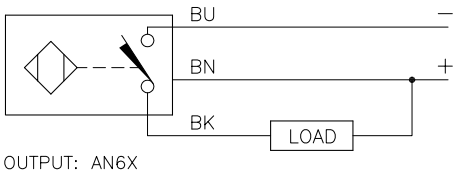

OUTPUT: AN6X

SHORT–CIRCUIT AND OVERLOAD PROTECTED

LOCKNUT LN–M30

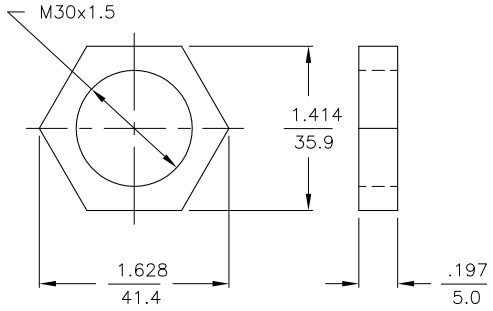

SPECIFICATIONS

RATED OPERATING DISTANCE	30mm = 1.181"
MOUNTING MODE	NON–FLUSH
MIN. REPEAT ACCURACY	≤ 2%
TEMPERATURE DRIFT	≤ ±10% ≤ ±15%, ≤ –25°C v ≥ +70°C
HYSTERESIS	3–15%
OPERATING TEMPERATURE	–30°C to +85°C (–22°F to +185°F)
RATED OPERATIONAL VOLTAGE	10–30 VDC
RESIDUAL RIPPLE	≤ 10%
DC RATED OPERATIONAL CURRENT	≤ 200 mA
NO–LOAD CURRENT	≤ 15 mA
RESIDUAL CURRENT	≤ 0.1 mA
RATED INSULATION VOLTAGE	≤ 0.5 kV
SHORT–CIRCUIT PROTECTION	YES
MAX. VOLTAGE DROP	≤ 1.8 V
WIRE BREAKAGE PROTECTION	INCORPORATED
REVERSE POLARITY PROTECTION	INCORPORATED
OUTPUT FUNCTION	3–WIRE, NORMALLY OPEN, NPN
MAX. SWITCHING FREQUENCY	≤ 0.5 kHz
HOUSING MATERIAL	METAL, BRASS/CHROME–PLATED
ACTIVE FACE MATERIAL	PLASTIC, LCP–GF30
END CAP MATERIAL	PLASTIC, EPTR
CABLE	ø5.2, LifYY, PVC
VIBRATION RESISTANCE	55 Hz, 1 mm AMPLITUDE (IN ALL 3 PLANES)
SHOCK RESISTANCE	30 g, 11 ms
DEGREE OF PROTECTION	IP68
SWITCHING STATUS INDICATION	LED, YELLOW

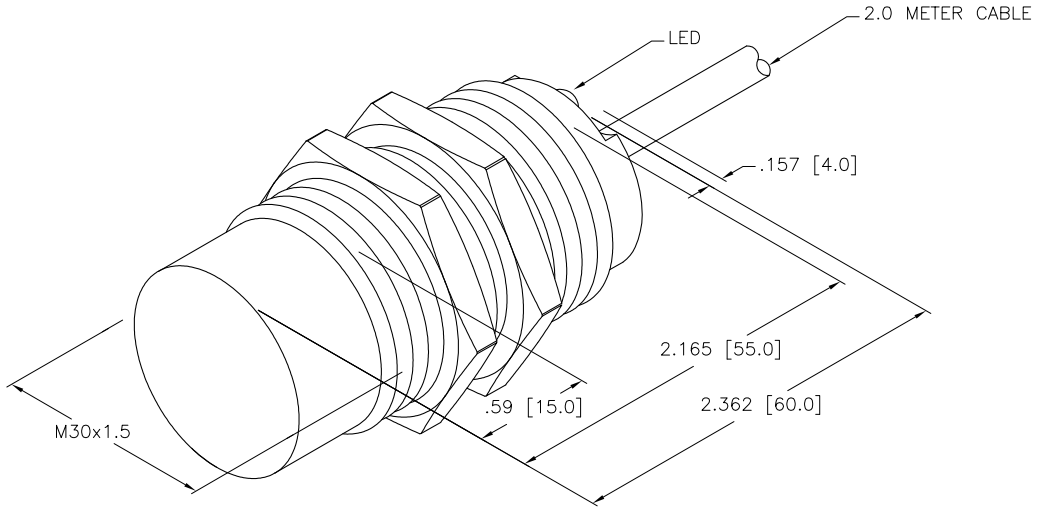

SOURCE DRAWING - FOR REFERENCE ONLY

NOTES:

1. UPROX HAS WELD FIELD IMMUNITY, SENSOR IS SUITABLE FOR USE ON RESISTANCE MACHINES.

REV	DESCRIPTION	BY	DATE	ECO NO.
A	DRAWING RELEASE	RDS	09/14/07	

RELATED DOCUMENTS
1.
2.
3.
4.

3RD ANGLE PROJECTION

THIS DRAWING IS PROPERTY OF TURCK INC. USE OF THIS DOCUMENT WITHOUT WRITTEN PERMISSION IS PROHIBITED.

MATERIAL

FINISH

ALL DIMENSIONS DISPLAYED ON THIS DRAWING ARE FOR REFERENCE ONLY

CONTACT TURCK FOR MORE INFORMATION

DRFT RDS | DATE 09/14/07
DSGN AF | SCALE 1=1.0

UNIT OF MEASUREMENT
INCH [MILLIMETER]
DO NOT SCALE THIS DRAWING

TURCK INC
High Technology Sensors and Automation Controls
3000 CAMPUS DRIVE
MINNEAPOLIS, MN 55441
1–800–544–7769
(763) 553–7300
(763) 553–0708 fax
turck.com

DESCRIPTION
NI30U–M30–AN6X

IDENTIFICATION NO. M1644634 | REV A

FILE: M1644634 | SHEET 1 OF 1