Spherical roller bearings, cylindrical and tapered bore

Principal dimensions			Basic load ratings		Fatigue load limit	Speed ratings		Mass	Designation
			dynamic	static		Reference speed	Limiting speed		
d	D	B	C	C_0	P_u				* - SKF Explorer bearing
mm			kN		kN	r/min		kg	-
55	100	25	125	127	13,7	6300	8500	0,84	22211 E *

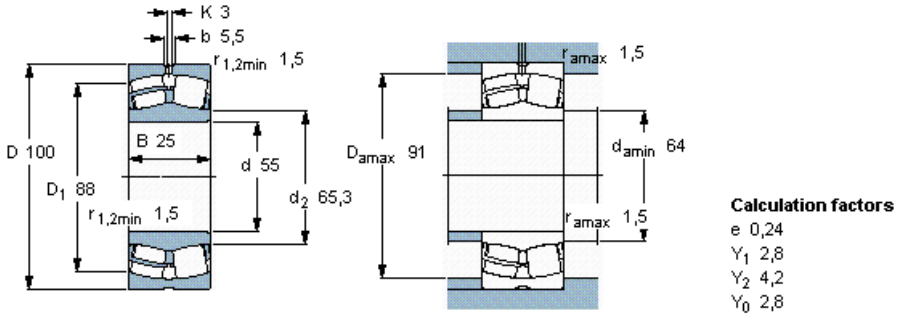

Calculation factors

e 0,24
Y_1 2,8
Y_2 4,2
Y_0 2,8