THE INFORMATION CONTAINED IN THIS DRAWING IS THE SOLE PROPERTY OF L-COM, INC. ANY REPRODUCTION IN PART OR WHOLE WITHOUT THE WRITTEN PERMISSION OF L-COM, INC. IS PROHIBITED.

RoHS Compliant ✔

REVISIONS			
REV	DESCRIPTION	DATE	APPROVED
E	ECN 3782: FIXED TWISTED PAIR IN WIRING MAP	1/6/09	D.CASTRO
F	ECN 4503: ADDED 3 FT & 20 FT NEW LENGTH IN TABLE A	1/19/10	D.FRISIELLO
G	ECN 6641: ADDED 1 FT LENGTH, REVISED LOGO, FORMAT	1/24/13	D.FRISIELLO

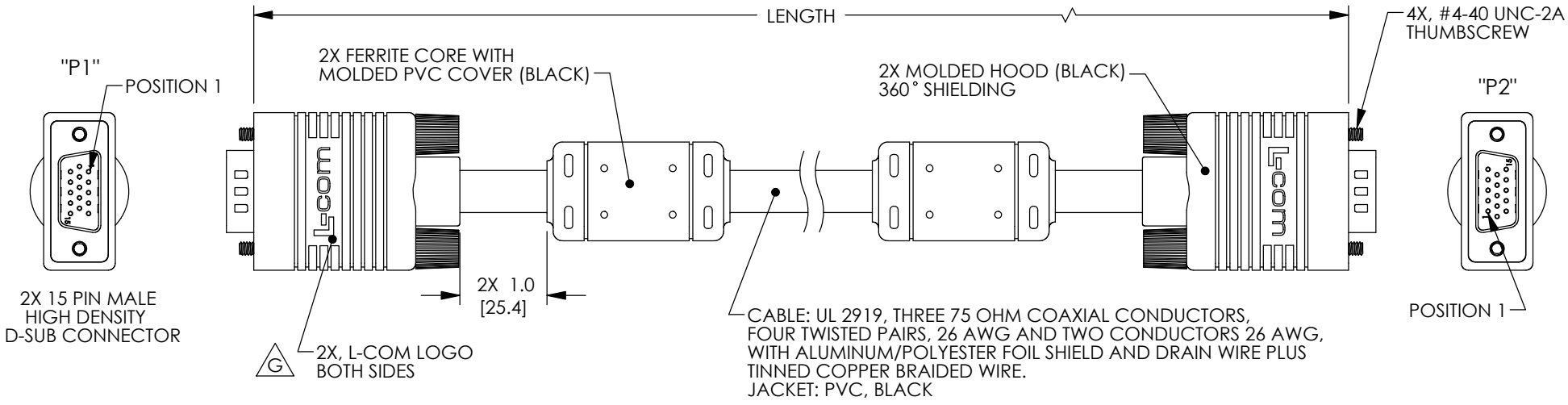

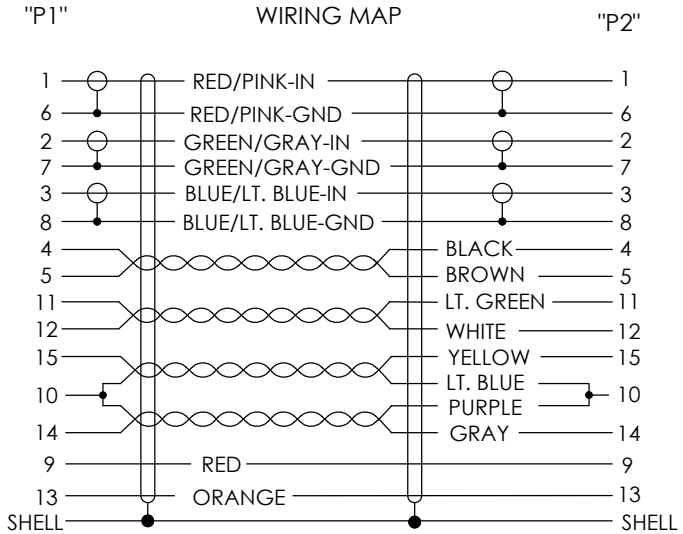

TABLE A		
PART NUMBER	LENGTH	
	FEET	METERS
CTLF3VGAMM-1	1.0	.30
CTLF3VGAMM-3	3.0	.91
CTLF3VGAMM-5	5.0	1.52
CTLF3VGAMM-10	10.0	3.05
CTLF3VGAMM-20	20.0	6.09
CTLF3VGAMM-25	25.0	7.62
CTLF3VGAMM-50	50.0	15.24
CTLF3VGAMM-100	100.0	30.48
CTLF3VGAMM-200	200.0	60.96

G

G

NOTES:

CABLE ASSEMBLY SHALL BE TESTED FOR CONTINUITY.
CABLE ASSEMBLY SHALL BE INDIVIDUALLY PACKAGED IN ACCORDANCE WITH L-COM SPECIFICATION PS-0031.

UNLESS OTHERWISE SPECIFIED,
DIMENSIONS ARE IN INCHES [mm]
OVERALL CABLE LENGTH TOLERANCE:
≤12 [305] = +1 [25] / -0
>12 [305] ≤60 [1524] = +2 [51] / -0
>60 [1524] ≤120 [3048] = +4 [102] / -0
>120 [3048] ≤300 [7620] = +6 [152] / -0
>300 [7620] = +5% / -0%
ALL OTHER DIMENSIONAL TOLERANCES:
.X = ± .2
.XX = ± .02
.XXX = ±.005
PROJECTION

APPROVALS	DATE
DRAWN BY D PARHAM	4/23/2001
CHECKED BY T. CLARK	4/23/2001
APPROVED BY R. CARRICK	4/30/2001

CONFIGURATION DETAILS OF UNDIMENSIONED FEATURES MAY VARY

COLOR VARIATIONS MAY OCCUR

L-COM Global Connectivity
45 BEECHWOOD DRIVE
NORTH ANDOVER, MA
01845

CATEGORY
AUDIO/VIDEO

PRODUCT DESCRIPTION
CABLE SVGA HD15 M/M WITH FERRITES

SIZE	FSCM NO.	DWG. NO.	REV.
A	43321	CTLF3VGAMM	G

SCALE: NONE | CAD FILE: CTLF3VGAMM.SLDDRW | SHEET 1 OF 1