# TE-MR SERIES

## Detector
## Horizontal Type

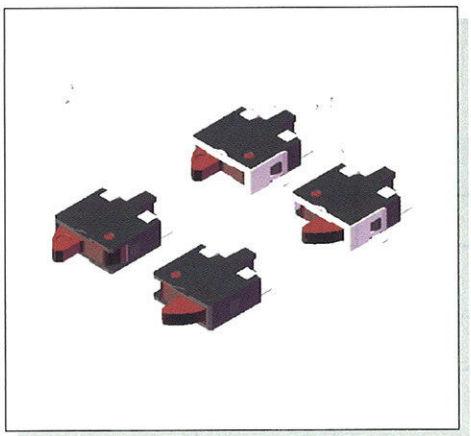

## HOW TO ORDER

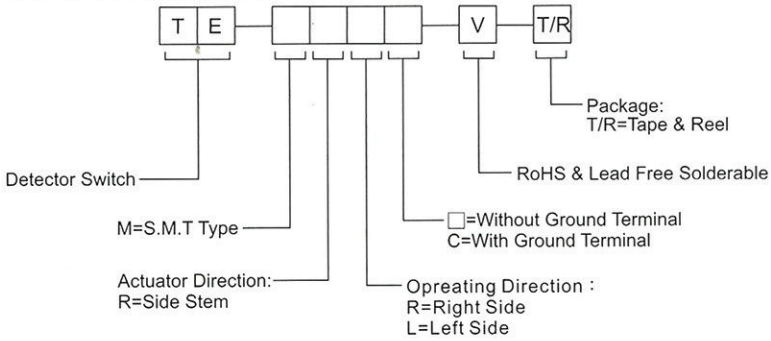


## SPECIFICATION

***MECHANICAL***

Operation Force: 40gf max.
Stroke: 2.15mm max.

***ENVIRONMENTAL***

Operation Temperature Range : -10°C to +60°C
Storage Temperature Range : -20°C to +70°C

***ELECTRICAL***

Electrical Life: 100,000 cycles.
Rating: 50mA, 20VDC.

***PACKAGE***

TE-MR□-T/R: 3000 pcs/reel
TE-MR□C-T/R: 2000 pcs/reel

## CIRCUIT

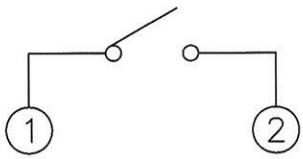


DETECTOR SWITCH

## TE-MRR

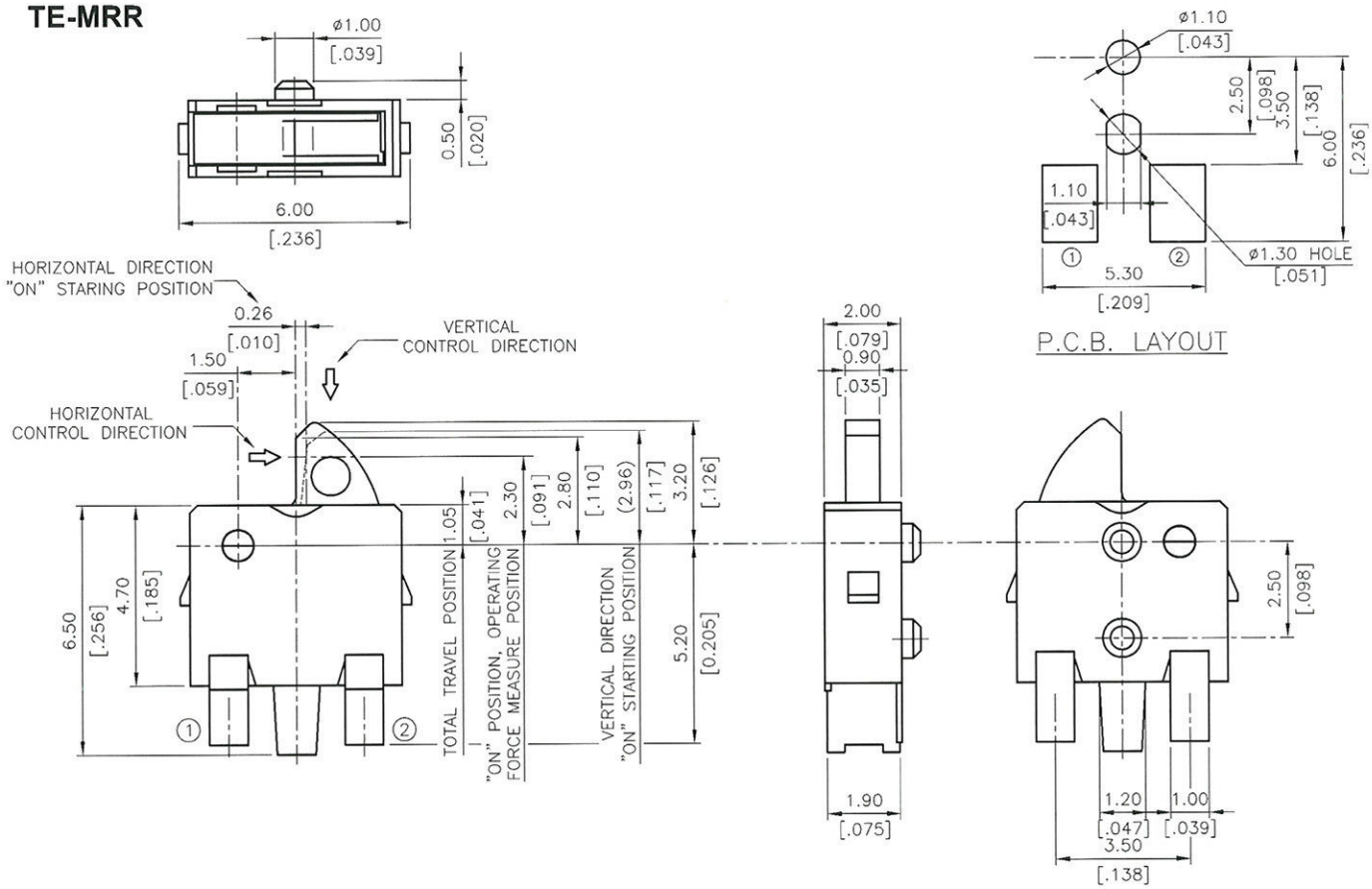


General Tolerance: ±0.2mm( ±0.008")

# TE-MR SERIES

## Detector
## Horizontal Type

LEAD FREE

RoHS Compliant

### TE-MRLC

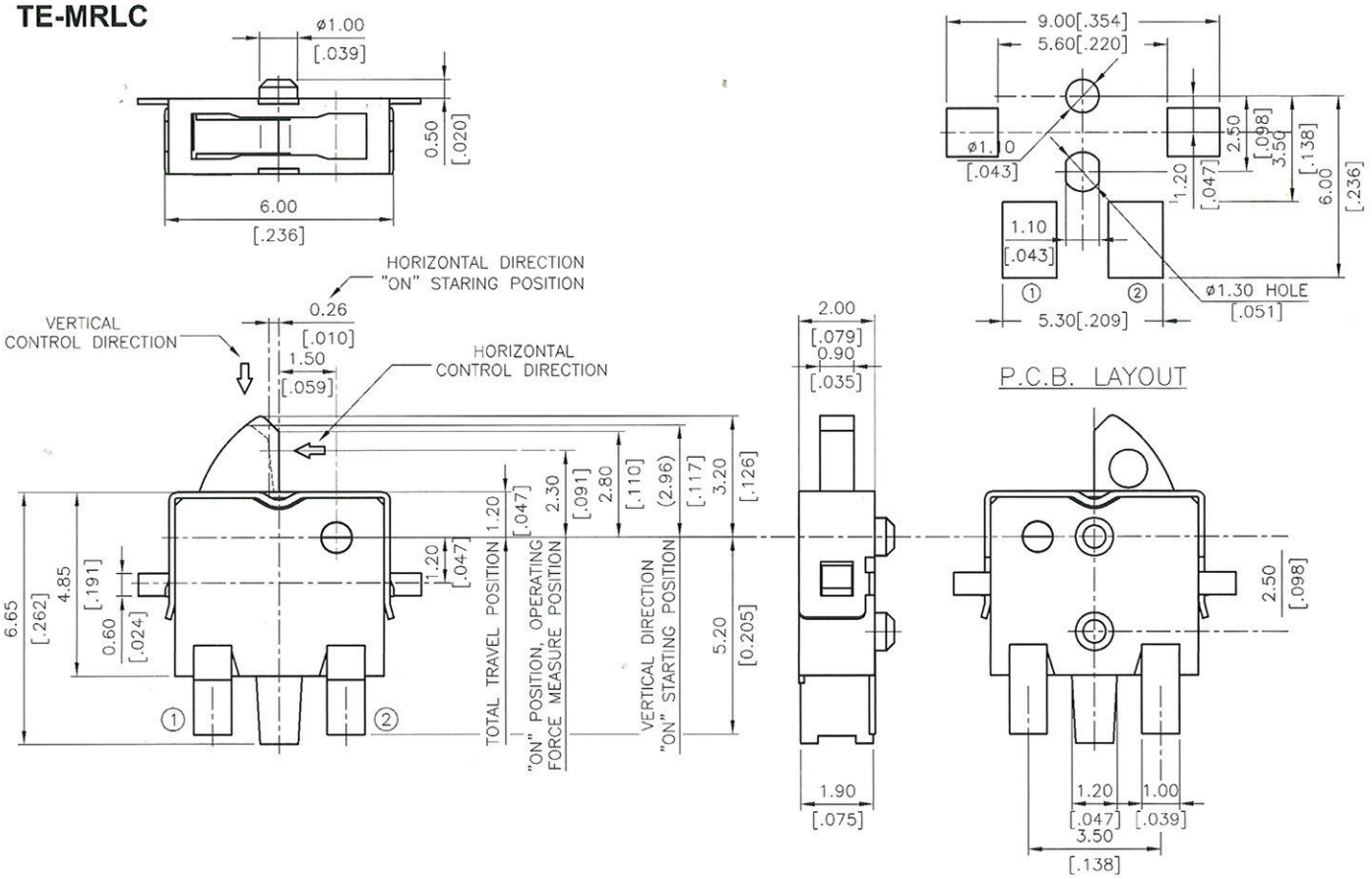




General Tolerance: ±0.2mm( ±0.008")