Fuseholder Open Design, 5 x 20 mm, THT, var. Covers, IEC 60335-1



250 VAC · 4 W / 10 A (VDE) · 500 VAC/DC · 10 A (UL/CSA)

Description
- For appliances in unattended use
- Glow wire tests acc. to IEC 60695-2-12 and -13
- Low profile fuse block with insulation walls

Standards
- IEC 60127-6
- UL 4248-1 / UL 512
- CSA C22.2 no. 39

Approvals
- VDE Certificate Number: 40001042
- UL File Number: E39328

Applications
- Industrial electronic
- Household appliances

Weblinks
pdf-datasheet, html-datasheet, General Product Information, Approvals, CE declaration of conformity, RoHS, CHINA-RoHS, REACH, e-Shop, SCHURTER-Stock-Check, Distributor-Stock-Check, Accessories, Detailed request for product

Technical Data

Fuse-Link	5 x 20 mm
Mounting	PCB
Mounting	Screw or Rivet
Terminal	Solder THT
Rated Voltage	250 VAC (VDE), 500 VAC/DC (UL/CSA)
Rated current	10 A (VDE), 10 A (UL/CSA)
Rated Power Acceptance IEC	4 W / 10 A @ Ta 23 °C 2.5 W / 10 A with transparant cover, see derating curves
Degree of Protection	IP 00 / IP 20
Protection Class	Suitable for appliances with protection class I or II acc. to IEC 61140
Admissible Ambient Air Temp.	-40 °C to 85 °C
Climatic Category	40/085/21 acc. to IEC 60068-1
Material: Socket	see variants
Material: Cover	Thermoplastic UL 94V-0
Material: Terminals	Tin-Plated Copper Alloy
Unit Weight (Socket/Cap)	1.7 g
Storage Conditions	0 °C to 60 °C, max. 70% r.h.
Product Marking	⊟, Type, Rated voltage, Power Acc./ Current Rating, Approvals

Soldering Methods	Wave
Solderability	245 °C / 3 sec acc. to IEC 60068-2-20, Test Ta, method 1
Resistance to Soldering Heat	260 °C / 10 sec acc. to IEC 60068-2-20, Test Tb, method 1A
Contact Resistance	< 5 mΩ at 20 mV
Dielectric Strength	> 3 kV (50 Hz; 1 min)
Impulse Withstand Voltage	> 4 kV between L-N
Insulation Resistance	> 10 MΩ between L-N (500 VDC; 1 min)
Overvoltage Category	I - III acc. to IEC 60664-1
Pollution Degree	1 - 3 acc. to IEC 60664-1
Resistance to Vibration	acc. to IEC 60068-2-6, test Fc

Dimension

22.5 mm

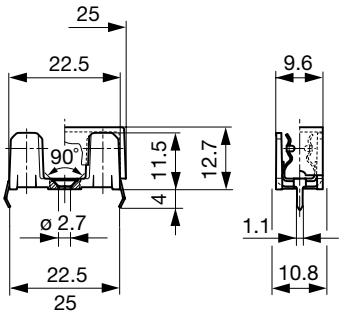

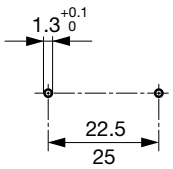

Drilling diagram

Derating Curves

With Transparent Cover

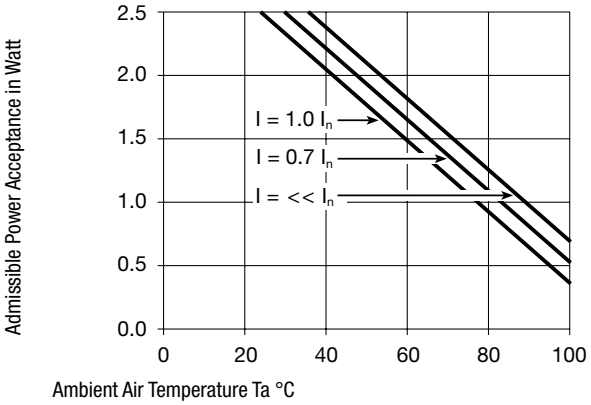

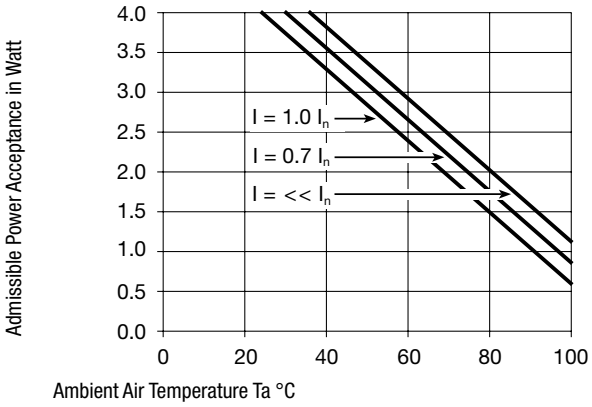

All Variants

Holder	Pin distance	Colour Holder	Material	Remark	Order Number
●	22.5	black	Thermoplastic	-	0031.8201
●	22.5	black	Spec. Thermoplastic	-	0031.8201.15
●	25	black	Thermoplastic	-	0031.8211
●	25	black	Spec. Thermoplastic	-	0031.8211.15

Most Popular.

Availability for all products can be searched real-time:http://www.schurter.com/en/Stock-Check/Stock-Check-SCHURTER

Spec. thermoplastic meets the requirements acc. to IEC 60335-1 Ed. 4.0 for appliances in unattended use (clause 30.2.3). This standard includes the enhanced requirements of glow wire tests acc. to IEC 60695-2-12 and -13.

Packaging Unit

Bulk 128 x 91 x 60 mm (100 pcs.)

Accessories

Description



Covers for OGN, OGN-SMD
Cover for Holder OGN, OGN-SMD



Adapter to OGN, OGN-SMD
Fuse Carriage with Handle for OGN, OGN-SMD

22.07.2014

The specifications, descriptions and illustrations indicated in this document are based on current information. All content is subject to modifications and amendments. Information furnished is believed to be accurate and reliable. However, users should independently evaluate the suitability and test each product selected for their own applications.