268 HANDHELD CASES
292 UNIVERSAL ENCLOSURES
318 HEAVY DUTY AND ELECTRICAL ENCLOSURES
342 DESKTOP AND INSTRUMENT CASES
348 DEVELOPMENT BOARD ENCLOSURES
367 ROOM SENSOR ENCLOSURES
370 CUSTOM SIZED ENCLOSURES

2957 series eco keyfobs

Product overview

Economic ABS keyfobs with 1-to-3 plastic button or one control button layout.

- Moulded in ABS
- One central button or 1-to-3 button layouts
- Snap-fit assembly of lid and base
- Small eyelet for keyring

2957





SPECIFICATION	
Materials	Base, lid ABS and buttons
Standard colours	Base and lid black similar to RAL 9004 Push buttons combinations of red, black and blue
Standard unit includes	Base, lid and push buttons

BLACK	LENGTH	WIDTH	HEIGHT	DESCRIPTION
2957-22	57mm	36mm	16mm	1 button
2957-23	57mm	36mm	16mm	2 button
2957-43	57mm	36mm	16mm	3 button
2957-46	45mm	35.6mm	14mm	1 button - large

2957-22,23,43 series

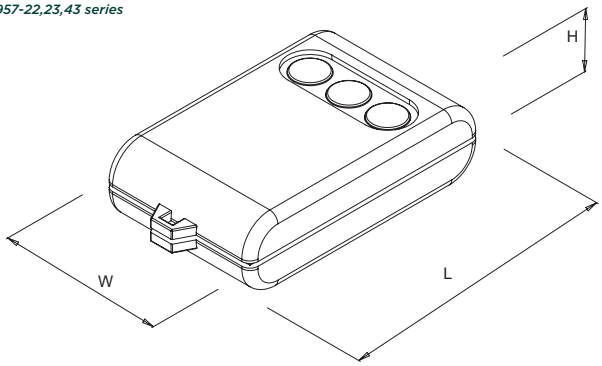

2957-46 series

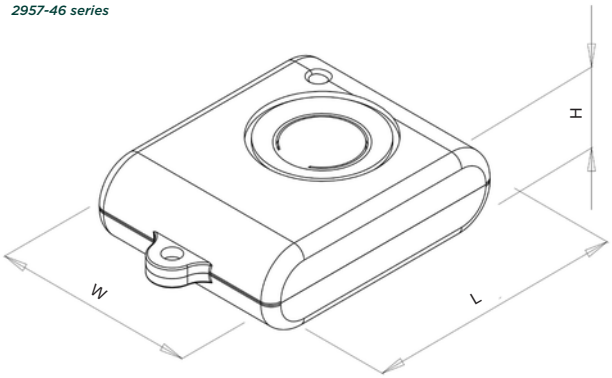

KEY FEATURES

Snap-fit assembly | Eyelet for keyring | 1-to-3 button layouts



+44 (0)1638 716101 | sales@camdenboss.com | www.camdenboss.com

We operate a constant improvement policy, our products are subject to change without notice.

Vers 1

bsi. ISO 9001 Quality Management FM 28614 ISO 14001 Environmental Management EMS 613558