DOC NO	ISSUE	REVISION	PRODUCT REF.	DATE	QUALITY PLAN
QF/RD/05	01	00	FAR1004	18.09.14	

TECHNICAL SPECIFICATIONS	SIGNATURE PRESIDENT (TECHNICAL)

WINCH (FAR1004)

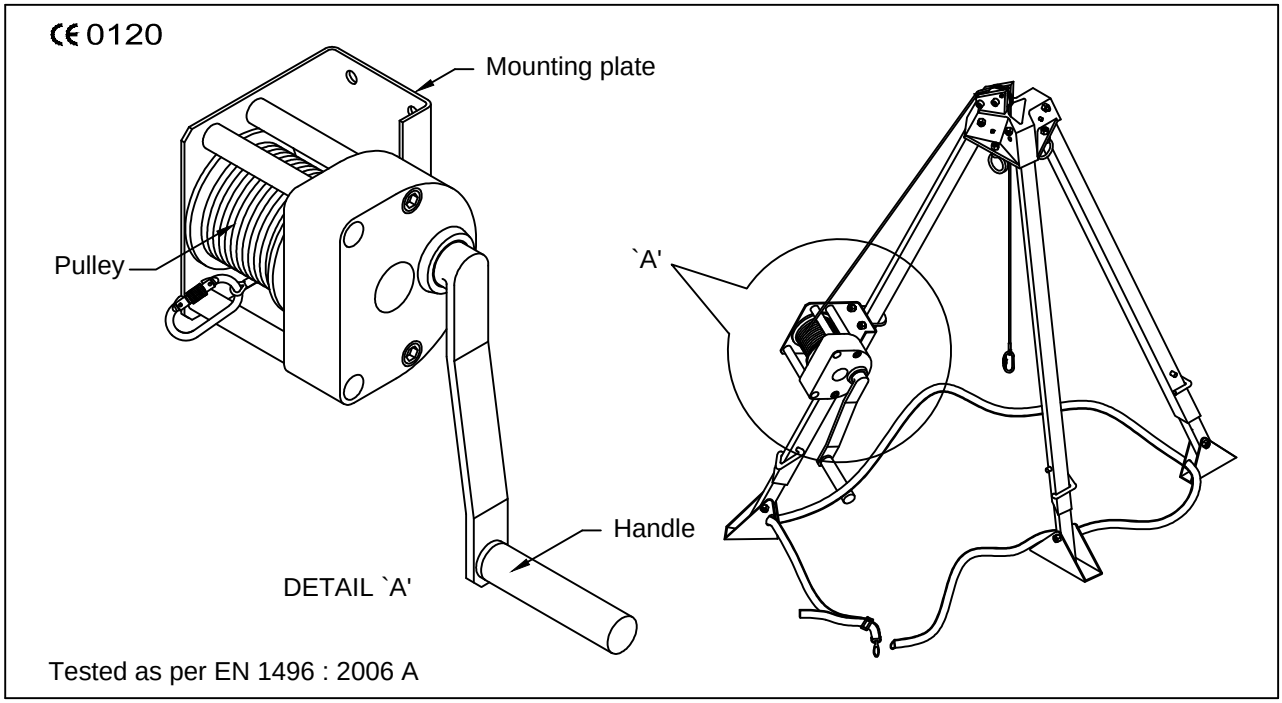

Tested as per EN 1496 : 2006 A

DESIGN

- Material or man lifting rescue winch.
- Mounting plate having four bolts for mounting to tripod leg or other support as required.
- Not to be used for fall arrest.
- Galvanized steel cable of Ø4.8 mm & length 20 m. maximum.
- Equipped with steel screw locking Karabiner as connector.
- Handle rotating mechanism for lifting or lowering.

BODY

- Material : Galvanized steel body.
  : Nylon moulded cover & beam for wire winding.

RATED LOAD CAPACITY

- : 125 kgs

VITAL TEST COMPLIANCE

- Static Strength : tested at 12.5 KN

WEIGHT

- : 7.500 kg ±10 gm

JSP
OXFORD, ENGLAND