DATASHEET - ZB65-XEZ



Individual mounting base, for ZB65 overload relay

Part no.	**ZB65-XEZ**
Catalog No.	**278474**
Alternate Catalog No.	**XTOBXDIND**
EL-Nummer (Norway)	**4131857**

Delivery program

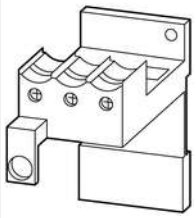

Product range	Accessories
Accessories	Base
Function	For separate mounting
For use with	ZB65

Notes

Can be snap fitted on a top-hat rail to IEC/EN 60715 or can be screw fitted.

For ZB32-38 use additional contactor BK25/3-PKZ0.

Technical data

Main conducting paths

Rated impulse withstand voltage	U_{imp}	V AC	6000
Overvoltage category/pollution degree			III/3
Rated insulation voltage	U_i	V	690
Rated operational voltage	U_e	V AC	690
Safe isolation to EN 61140			
Between main circuits		V AC	440
Terminal capacities		mm^2	
Solid		mm^2	1 x (1 - 16) 2 x (1 - 16)
Flexible with ferrule		mm^2	1 x (1 - 25) 2 x (1 - 25)
Stranded		mm^2	1 x (16 - 35)
Solid or stranded		AWG	14 - 2
Terminal screw			M6
Tightening torque for terminal screw		Nm	3.5
Stripping length		mm	11
Tools			
Pozidriv screwdriver		Size	2
Standard screwdriver		mm	1 x 6

Design verification as per IEC/EN 61439

Technical data for design verification			
Rated operational current for specified heat dissipation	I_n	A	75
Heat dissipation per pole, current-dependent	P_{vid}	W	0.5
Equipment heat dissipation, current-dependent	P_{vid}	W	1.5
Static heat dissipation, non-current-dependent	P_{vs}	W	0
Heat dissipation capacity	P_{diss}	W	0
Operating ambient temperature min.		°C	-25
Operating ambient temperature max.		°C	55

IEC/EN 61439 design verification	
10.2 Strength of materials and parts	
10.2.2 Corrosion resistance	Meets the product standard's requirements.
10.2.3.1 Verification of thermal stability of enclosures	Meets the product standard's requirements.
10.2.3.2 Verification of resistance of insulating materials to normal heat	Meets the product standard's requirements.
10.2.3.3 Verification of resistance of insulating materials to abnormal heat and fire due to internal electric effects	Meets the product standard's requirements.
10.2.4 Resistance to ultra-violet (UV) radiation	Meets the product standard's requirements.
10.2.5 Lifting	Does not apply, since the entire switchgear needs to be evaluated.
10.2.6 Mechanical impact	Does not apply, since the entire switchgear needs to be evaluated.
10.2.7 Inscriptions	Meets the product standard's requirements.
10.3 Degree of protection of ASSEMBLIES	Does not apply, since the entire switchgear needs to be evaluated.
10.4 Clearances and creepage distances	Meets the product standard's requirements.
10.5 Protection against electric shock	Does not apply, since the entire switchgear needs to be evaluated.
10.6 Incorporation of switching devices and components	Does not apply, since the entire switchgear needs to be evaluated.
10.7 Internal electrical circuits and connections	Is the panel builder's responsibility.
10.8 Connections for external conductors	Is the panel builder's responsibility.
10.9 Insulation properties	
10.9.2 Power-frequency electric strength	Is the panel builder's responsibility.
10.9.3 Impulse withstand voltage	Is the panel builder's responsibility.
10.9.4 Testing of enclosures made of insulating material	Is the panel builder's responsibility.
10.10 Temperature rise	The panel builder is responsible for the temperature rise calculation. Eaton will provide heat dissipation data for the devices.
10.11 Short-circuit rating	Is the panel builder's responsibility. The specifications for the switchgear must be observed.
10.12 Electromagnetic compatibility	Is the panel builder's responsibility. The specifications for the switchgear must be observed.
10.13 Mechanical function	The device meets the requirements, provided the information in the instruction leaflet (IL) is observed.

Technical data ETIM 7.0

Low-voltage industrial components (EG000017) / Accessories for overload protection device (EC002027)	
Electric engineering, automation, process control engineering / Low-voltage switch technology / Overload protection device / Overload protection device (accessories) (ecl@ss10.0.1-27-37-15-92 [ACO017011])	
Type of accessory	Base

Approvals

Product Standards	UL 508; CSA-C22.2 No. 14; IEC/EN 60947-4-1; CE marking
UL File No.	E29184
UL Category Control No.	NKCR
CSA File No.	12528
CSA Class No.	3211-03
North America Certification	UL listed, CSA certified
Specially designed for North America	No
Max. Voltage Rating	600 V AC
Degree of Protection	IEC: IP00, UL/CSA Type: -

Dimensions

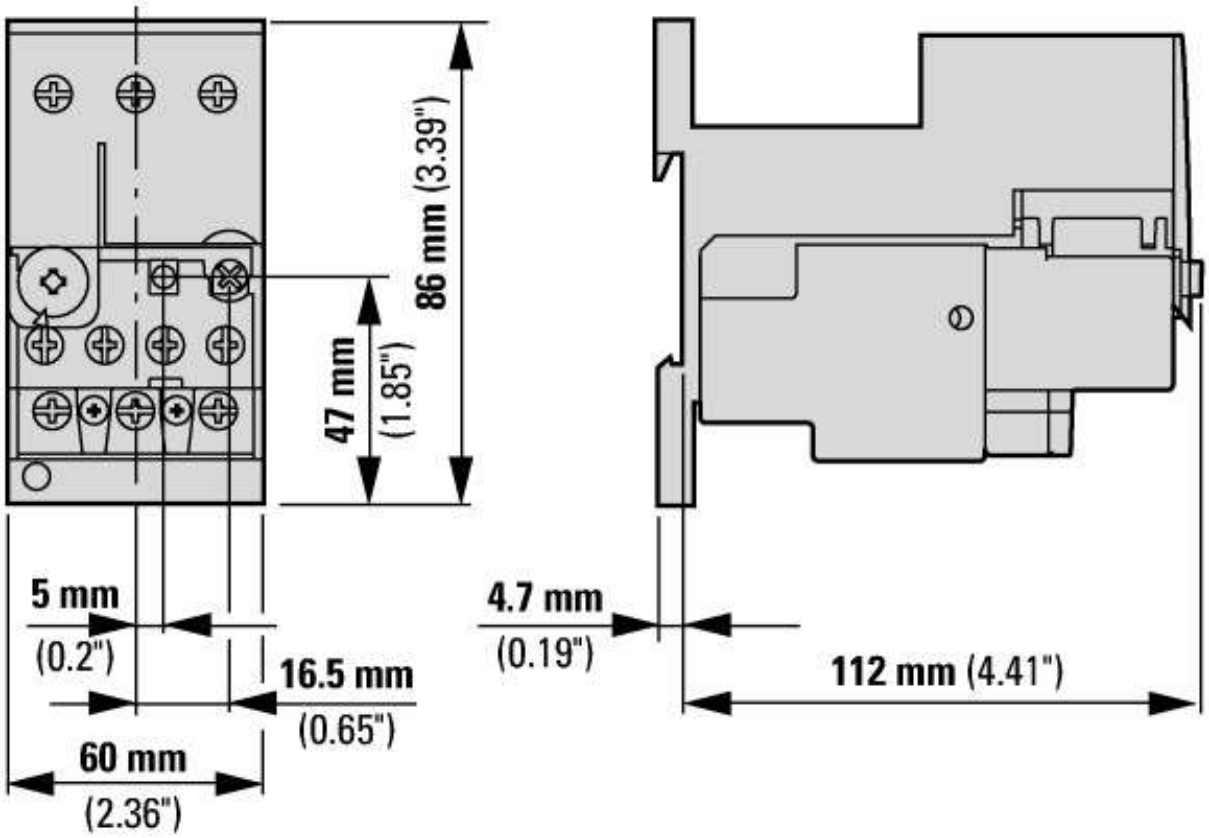

① OFF
② Reset/ON

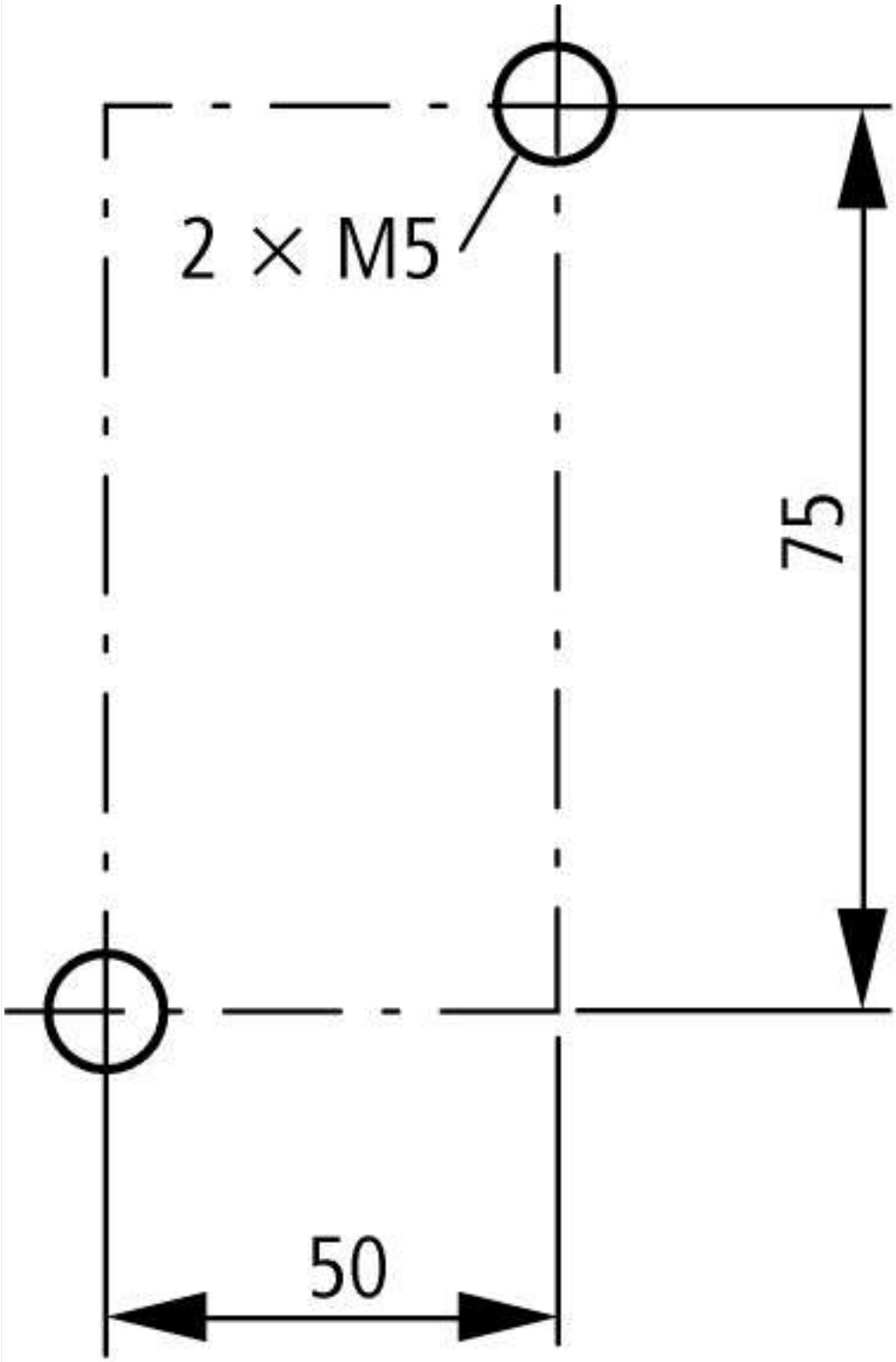

© 02/2021 by Eaton Industries GmbH