REI-E-114I15E-2B5000-H1181
Incremental Encoder
Efficiency Line

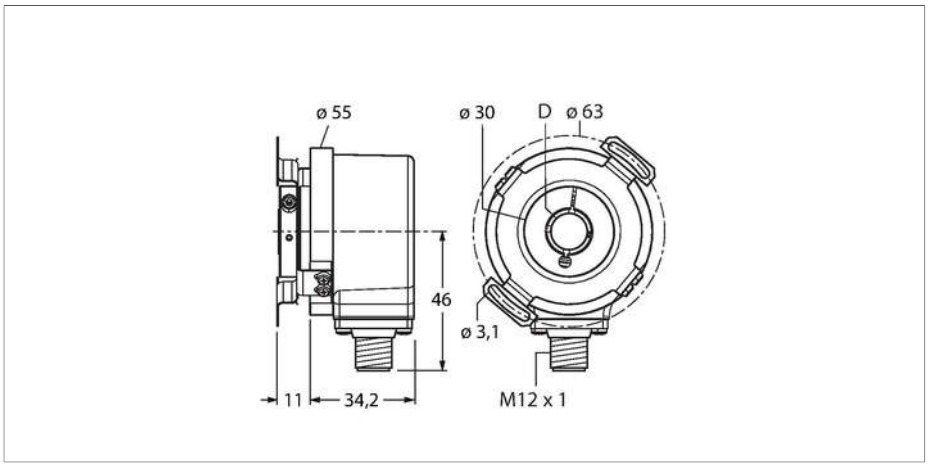



Technical data

Type	REI-E-114I15E-2B5000-H1181
ID	100011797
Measuring principle	Optical
General data	
Max. Rotational Speed	4500 rpm
Moment of inertia of the rotor	6 × 10^{-6} kgm²
Starting torque	< 0.05 Nm
Output type	Incremental
Resolution, incremental	5000 ppr
Electrical data	
Operating voltage	10…30 VDC
No-load current	100 mA
Output current	≤ 30 mA
Short-circuit protection	yes
Wire breakage/Reverse polarity protection	yes
Pulse frequency max.	300 kHz
Signal level high	min. U_B - 1 V
Signal level low	max. 0.5 V
Output function	Push-Pull/HTL, invertable
Mechanical data	
Design	Hollow shaft
Flange type	Flange with stator coupling
Flange diameter	Ø 63 mm
Shaft Type	Hollow shaft
Shaft diameter D [mm]	15

Features

- Flange with stator coupling, Ø 63 mm
- Hollow shaft, Ø 15mm
- Optical measuring principle
- Shaft material: stainless steel
- Protection class IP64 on housing and shaft side
- -20…+70 °C
- Max. 4500 rpm (continuous operation 3000 rpm)
- 10…30 VDC
- Push-pull/HTL invertible
- Pulse frequency max. 300 kHz
- M12 × 1 male connector, 8-pin
- 5000 pulses per revolution

Wiring diagram

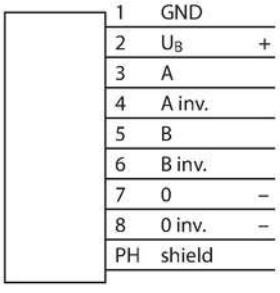

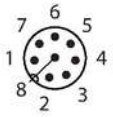

REI-E-114I15E-2B5000-H1181| 19-07-2023 04-30 | Technical modifications reserved

Technical data

Shaft material	Stainless steel
Housing material	Die-cast zinc
Electrical connection	Connector, M12 × 1
	8-pin
Axial shaft load	40 N
Radial shaft load	80 N
Environmental conditions	
Ambient temperature	-20…+70 °C
Vibration resistance (EN 60068-2-6)	100 m/s², 10…2000 Hz
Shock resistance (EN 60068-2-27)	1000 m/s², 6 ms
Protection class	IP64
Protection class shaft	IP64

Accessories

Dimension drawing	Type	ID	
	RKC8T-2/TXL	6625142	Connection cable, female M12, straight, 8-pin, cable length: 2 m, sheath material: PUR, black; cULus approval; other cable lengths and qualities available, see www.turck.com
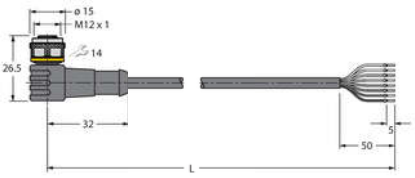	WKC8T-2/TXL	6625145	Connection cable, M12 female connector, angled, 8-pin, cable length: 2 m, jacket material: PUR, black; cULus approval; other cable lengths and qualities available, see www.turck.com

REI-E-114115E-2B5000-H1181| 19-07-2023 04-30 | Technical modifications reserved