Instrument Case - ABS (1598 Series)

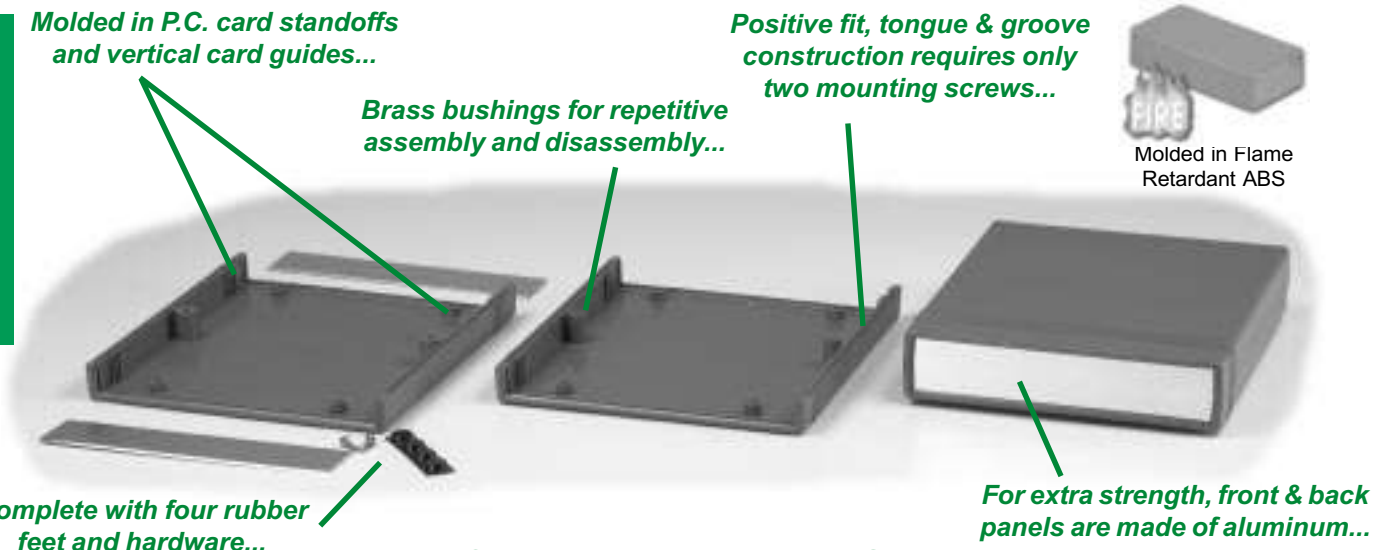

OTHER KEY FEATURES

- Desk top electronic instrument enclosure, ideally suited for mounting printed circuit boards.
- Molded in flame retardant ABS plastic (material carries a UL flammability rating of 94V-0).
- Designed to meet IP54.
- Two sets of vertical 1.5 mm (0.062") P.C. board guides are molded into case halves front and rear.
- Front and rear panels are 1.6 mm (0.064") brushed aluminum with protective paper on one side.
- Cases halves are secured with M3 x 0.5" x 10 mm (0.39") Philips machine screws threaded into tapped integral brass bushings.
- Integral horizontal P.C. card mounts on Eurocard centers.
- Stocked in matte textured black and grey.
- EMI/RFI shielded cases are stocked in black (see table).

ACCESSORIES



Replacement Screws

Machine screws, used in flame retardant ABS 1598 series (ie...with brass inserts). M3 - 0.5" x 10 mm
1591MS100 - Package of 100



Nylon Circuit Board Standoffs

Self adhesive pad allows placement anywhere in the enclosure.
1598ZPC25 - Package of 25
1598ZPC100 - Package of 100



Optional Plastic End Panels (Black)

Molded from black fire retardant ABS plastic. Part contains both front & back panel.
1598PLABK - Use with 1598A
1598PLBBK - Use with 1598B
1598PLBBBK - Use with 1598BB
1598PLCBK - Use with 1598C
1598PLDBK - Use with 1598D
1598PLEBK - Use with 1598E
1598PLFBK - Use with 1598F
1598PLGBK - Use with 1598G
1598PLHBK - Use with 1598H
1598PLJBK - Use with 1598J



P.C. Board Screws

Self-tapping type, used in bosses in the 1598 series for P.C. board installation. #6 x 1/4" (6.4 mm)
1598ATS100 - Package of 100



Tilt Handles

Used as a tilt handle and/or bail - 8 detent positions.
1598TH1 - Use with 1598C,E,F &G
1598TH2 - Use with 1598D, H & J

©
CANADA
Guelph, Ontario (519) 822-2960
St. Laurent, Quebec (514) 343-9010
USA
Cheektowaga, NY (716) 651-0086
www.hammondmfg.com
EUROPE
Basingstoke, UK +44 1256 812812
AUSTRALASIA
Queenstown, SA, Australia +61 8 8240 2244

Instrument Case - ABS (1598 Series)

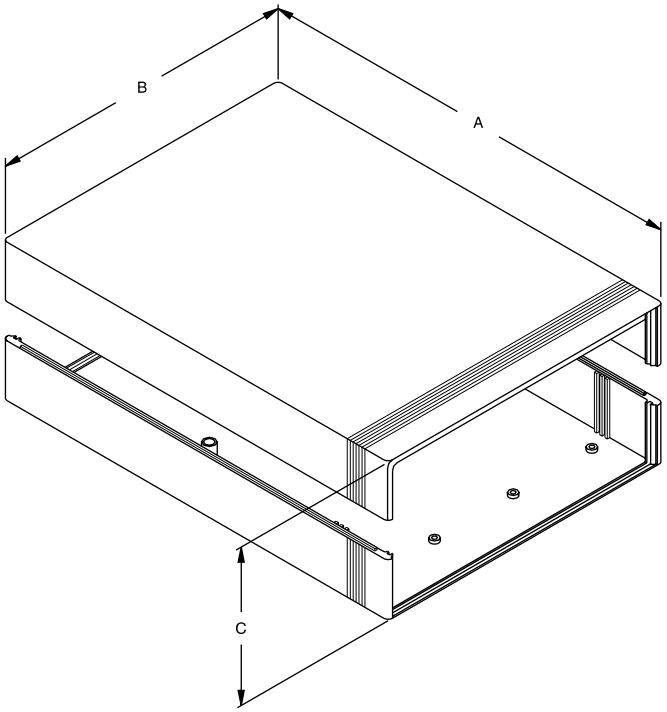



Molded in Flame Retardant ABS

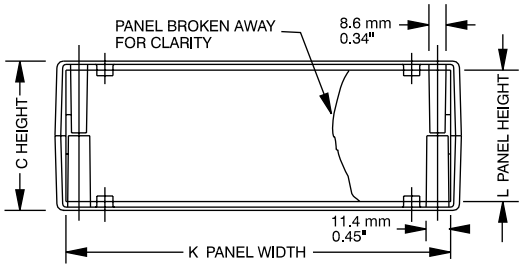

End View

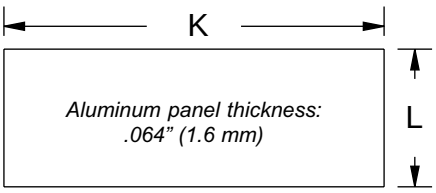

Front or Rear Panel

Part Number			Units	Dimensions			Panel Size	
Black	Grey	Black Shielded		A	B	C	K	L
1598BBK	1598BGY	1598RBBK	inch	5.28	5.31	1.96	5.04	1.77
			mm	134	135	50	128	45
1598ABK	1598AGY	1598RABK	inch	6.18	3.70	1.42	3.39	1.06
			mm	157	94	36	86	27
1598EBK	1598EGY	1598REBK	inch	6.30	6.30	3.38	5.98	3.11
			mm	160	160	86	152	79
1598BBBK	1598BBGY	1598RBBBK	inch	7.05	6.06	1.42	5.75	1.14
			mm	179	154	36	146	29
1598CBK	1598CGY	1598RCBK	inch	7.09	6.10	2.04	5.71	1.81
			mm	180	155	52	145	46
1598DBK	1598DGY	1598RDBK	inch	7.09	8.11	2.52	7.80	2.28
			mm	180	206	64	198	58
1598FBK	1598FGY	1598RFBK	inch	9.84	6.30	1.58	5.98	1.38
			mm	250	160	40	152	35
1598GBK	1598GGY	1598RGBK	inch	9.84	6.30	3.00	5.98	2.72
			mm	250	160	76	152	69
1598HBK	1598HGY	1598RHBK	inch	11.02	7.87	1.58	7.56	1.38
			mm	280	200	40	192	35
1598JBK	1598JGY	1598RJBK	inch	11.02	7.87	3.00	7.56	2.72
			mm	280	200	76	192	69

NOTES: - Average top & bottom wall thickness: 0.125" (3.2 mm)
- Average side wall thickness: 0.18" (4.5 mm)

1598 Series Drawings

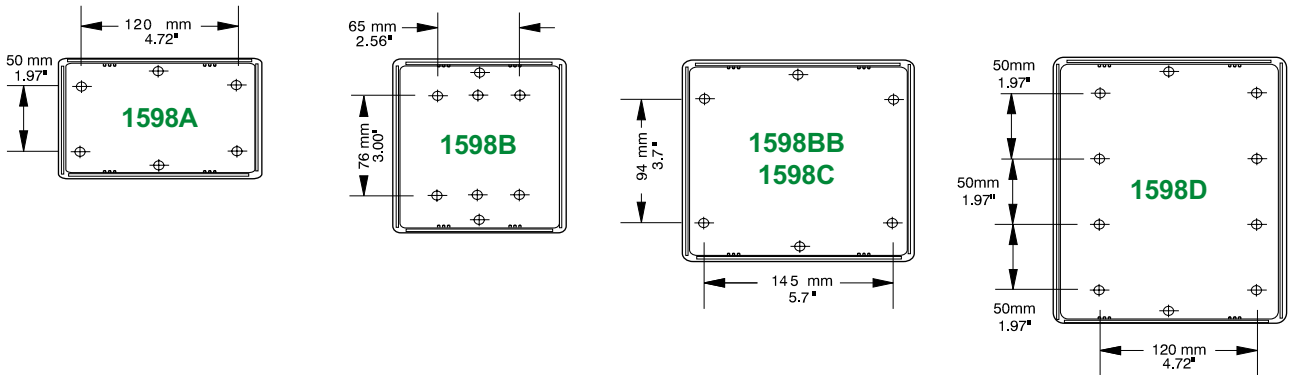

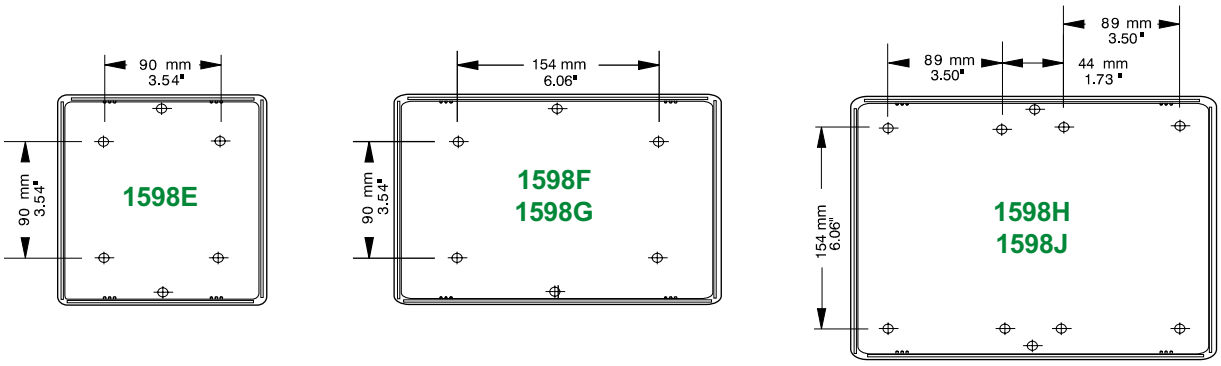

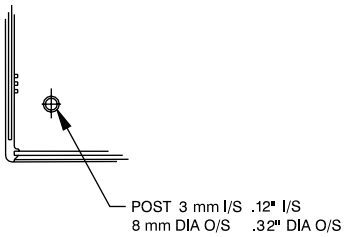

P.C. Board Standoff Detail

For detailed drawings, CAD files and color photos visit our website at:
www.hammondmfg.com

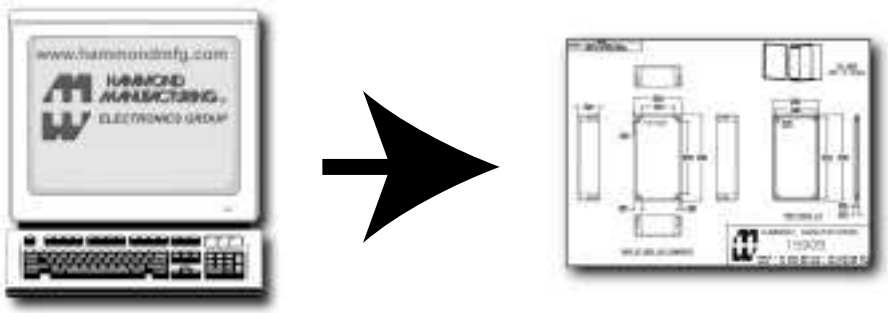

CANADA
Guelph, Ontario (519) 822-2960
St. Laurent, Quebec (514) 343-9010
USA
Cheektowaga, NY (716) 651-0086

www.hammondmfg.com

EUROPE
Basingstoke, UK +44 1256 812812

AUSTRALASIA
Queenstown, SA, Australia +61 8 8240 2244

©