E40563

Gasket

SEAL RING EPDM DN50

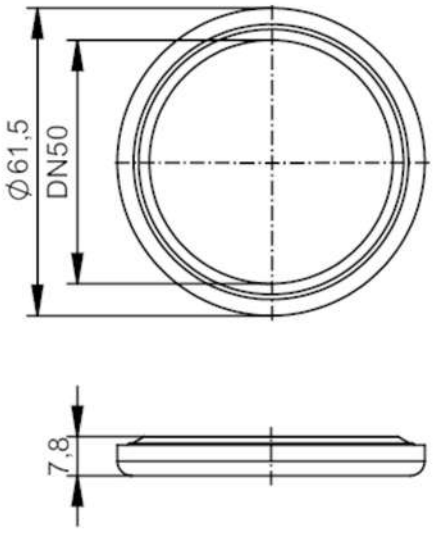

EC 1935/2004 FCM

Application		
Design		for volumetric flow meters SMF
Application		food and beverage industry; hygienic systems
Medium temperature	[°C]	-20...150
Mechanical data		
Weight	[g]	14.2
Inside diameter	[mm]	48.7
External diameter	[mm]	61.5
Materials		EPDM
Nominal diameter		DN50 (2“)
Remarks		
Pack quantity		2 pcs.