COUPLMMCIP54

Waterproof box for copper (RJ or coaxial) or fiber connection

BENEFITS

- Outside installation thanks to its IP54 grade
- Compatible with copper LAN cable, coaxial or optical fiber
- Simplicity of installation



Hole for mounting by screw or clamp

Robust clips closing for sealing



Adapted form to connections such as couplers, adapter plates or Keystone format connectivity

Cable entry for external diameter from 5 to 8mm. Optionnal oversheath for the cable diameters lower than 5mm.

Compatible with copper cable, coaxial or optical fiber



Fiber optical connection



RJ45 coupler connection



RJ45 connector / Rj plug connection

cae GROUPE
www.cae-groupe.fr

This document is confidential, and is the property of CAE GROUPE. CAE GROUPE own the copyright, and the document must not be copied or changed in any form, wholly or in part without written permission from CAE GROUPE. The contents of this document must be disclosed to any other person or persons. The characteristics related to this document are not contractual, and can be modified without warning.

member of the TKH Group

TECHNICAL DATASHEET

Ed 1 092020 RN

DESCRIPTION

The waterproof COUPLMMCIP54 box is ideal for protecting your outdoor connections such as IP camera,... The box is also adapted to cables with an external diameter from 5 to 8mm. A sleeve is given for cable diameters lower than 5mm.

The COUPLMMCIP54 is UV and water penetration resistant according to UL 746C and UL94-V0 standards.

TECHNICAL/MECHANICAL PROPERTIES

MATERIAL : High resistance thermical plastic
COLOR : Black RAL 9005
DIMENSIONS : 142 mm x 38 mm x 32 mm

PROTECTION : IP54
FIRE RESISTANCE : UL94-V0
WEATHER RESISTANCE: UL 746C

3D DRAWS

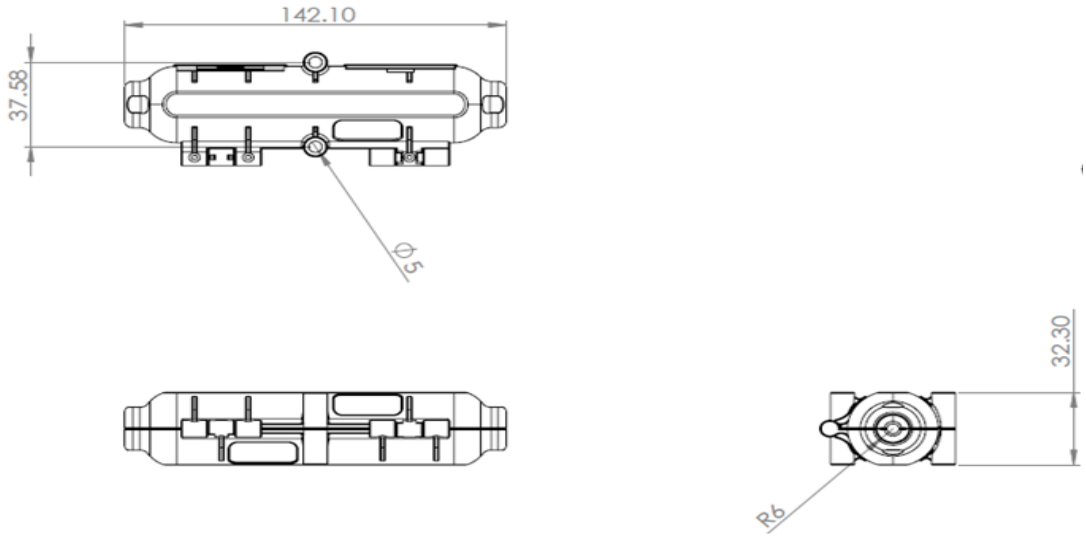

ORDERING INFORMATION

PART NUMBER	DESCRIPTION	PACKAGING
COUPLMMCIP54	Waterproofness IP54 box for external connection	Unit

This document is confidential, and is the property of CAE GROUPE. CAE GROUPE own the copyright, and the document must not be copied or changed in any form, wholly or in part without written permission from CAE GROUPE. The contents of this document must be disclosed to any other person or persons. The characteristics related to this document are not contractual, and can be modified without warning.