APEM
KR series

Power rocker switches

- Wide choice of colours
- Laser etched symbols
- Illuminated or non-illuminated
- Optionally sealed to IP68



Up-to-date rocker design

APEM

KR series

Power rocker switches

The K range at a glance

A range of mix and match products



KR rocker switches
Attractive rugged rocker switches with more that 3.000.000 possible combinations.
Custom laser etching.



KL locking rocker switches
Available with 2 or 3 positions, with one locked position.
Patented intuitive ergonomics.



KI indicators
A complete indicator series with a wide choice of colours and a large number of LEDs.
Long life expectancy.

2008 new product



KG rocker switches
With a raised protection bezel preventing inadvertent actuation of the rocker.

Accessories



Hole plug
For future extensions.



Connector
For separate wiring.



Mounting panel units
To limit the number of cut-outs.



Removing tool

APEM will be happy to develop custom product solutions. Please contact us with your requirements.

Attractive rugged rocker switch

Removable actuator
Easy to stock
Easy to customize

Up-to-date rocker design
Smooth curves
Wide choice of colours and symbols
Laser etched symbols on illuminated versions

High performance LEDs
Long life expectancy
An array of colours and voltages

Optional panel seal

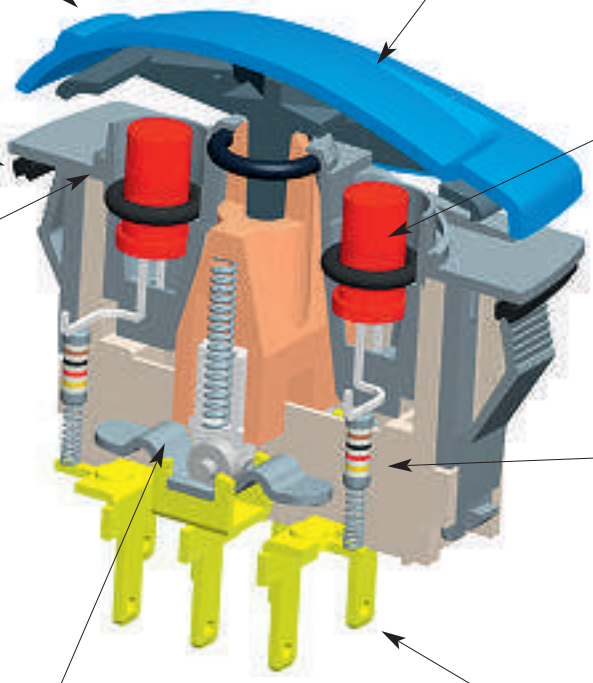

High performance ultrasonic welding
Protection against dust and the effects of continuous immersion under pressure.

Integrated resistors
Easy electrical connection

Robust roller contact
Very long life expectancy
Many electrical functions available

Large variety of terminal options
Up to 10 terminals
Screw, solder lug and quick-connect

APEM will be happy to develop custom product solutions. Please contact us with your requirements.

KR series

Power rocker switches

Specifications



- ❑ **Up-to-date rocker design**
- ❑ **Wide choice of colours**
- ❑ **Laser etched symbols**
- ❑ **Illuminated or non-illuminated**
- ❑ **Optionally sealed to IP68**

ELECTRICAL SPECIFICATIONS

- Currrent/voltage rating with resistive load :
  5A 24VDC, 100.000 cycles
  10A 24VDC, 10.000 cycles (terminals 6.35 x 0.8 only)
- Initial contact resistance : 10 mΩ max.
- Insulation resistance : 1.000 MΩ min. at 500VDC
- Dielectric strength : 2.000 Vrms 50 Hz min. between terminals
- Mechanical life :150.000 cycles min.

ENVIRONMENTAL SPECIFICATIONS

- Degree of protection of sealed versions : frontal sealing to IP68 according to IEC 60529 (submersion under 1 meter of water for more than 30 minutes)
- Salt spray resistance : 96 hours according to IEC 512-6, test 11f
- Operating temperature : -40°C to +85°C

DIMENSIONS

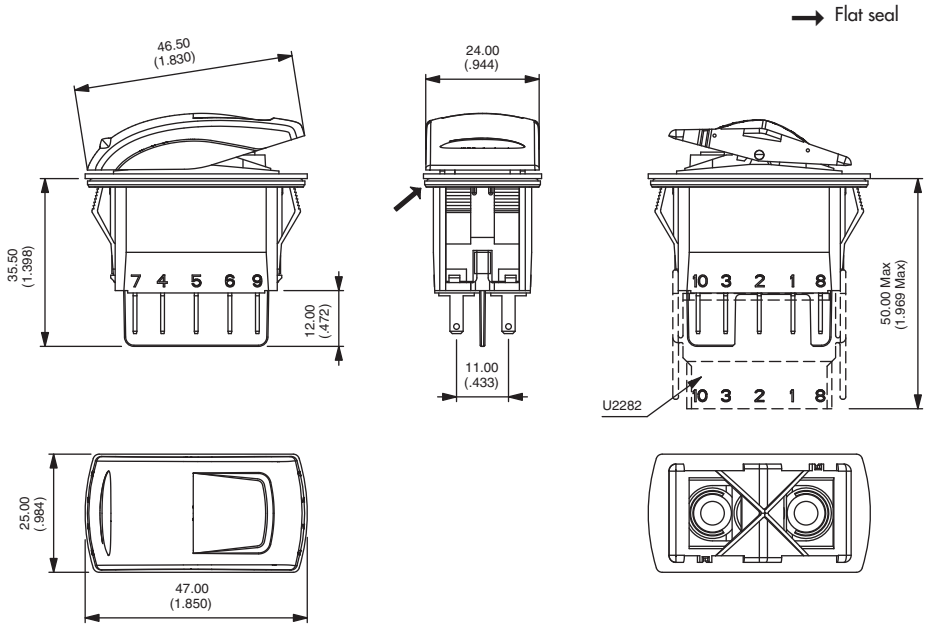

MATERIALS

- Case : PA 6-6
- Actuator : ABS
- Bezel : PA 6-6
- Terminals : brass, silver plated
- Contacts : silver
- Contact roller : brass, nickel plated

SEALING

Sealing is optional.

To order a sealed product, complete the appropriate box of ordering format on the following pages.

Dimensions : First dimensions are in mm while inches are shown as bracketed numbers.

Tolerance : The general tolerance for dimensions in this brochure is ± 0,3 (.012). Overall dimension tolerance is ± 0,5 (.020).

Packaging unit : 40 pieces

Dimensions, specifications and data shown in this brochure are subject to change without notice.

HOW TO ORDER

• To order a complete product, fill in all the boxes of the following order guide.

• To order case only (without actuator), finish your order number with the LED wiring code.

• To order actuator only (without case), begin the order number with code KRR, then follow the order format from "actuator type" until the end of the options.

CASE + LEDS

KR						Side A	Side B	

SERIES

Poles

3	Single pole
4	Double pole

Electrical functions

1	ON	-	OFF
4	ON	ON	ON
4-1R	ON	ON	MOM
5	MOM	-	ON
6	ON	-	ON
7	MOM	OFF	MOM
8	ON	OFF	MOM
9	ON	OFF	ON

Terminals

Screw

0	6 terminals with barrier

Solder lug/quick-connect

2	6 terminals with barrier
4	6 terminals w/o barrier
A	10 term. with barrier
B	10 term. w/o barrier
C	10 terminals for use with connector U2292

Quick-connect 6,35x0,8

3	6 terminals with barrier

Terminals (continued)

Quick-connect 6,35x0,8

5	6 terminals w/o barrier
D	10 term. with barrier
E	10 term. w/o barrier
F	10 term. for use with connector U2292

Quick-connect 2,8x0,8

G	10 term. with barrier
H	10 term. w/o barrier
J	10 terminals for use with connector U2282

Contacts

A	Silver

Sealing

X	No
K	Yes

LEDS

X	None
A	LED 6V red
B	LED 6V green
C	LED 6V amber
M	LED 6V blue
R	LED 6V white
D	LED 12V red
E	LED 12V green
F	LED 12V amber
N	LED 12V blue
S	LED 12V white
J	LED 24V red
K	LED 24V green
L	LED 24V amber
P	LED 24V blue
T	LED 24V white

LED wiring

See diagrams page 9.

ACTUATOR

Type

1	For non-illuminated application
2	For illuminated application

Colour

1	Blue
1/4	Dark blue
2	Black
3	Green
4	Grey
5	Yellow
6	Red
7	Ivory
9	Orange
A	Chrome

ACTUATOR MARKING

Orientation

N	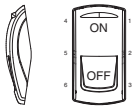
O	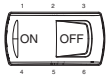
S	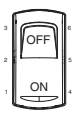
E	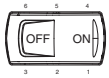

Symbols

A	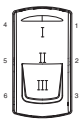
M	
B	

See table pages 11 & 12.

Marking in M area : on request.

Accessories : see page 14.

NOTICE : please note that not all combinations of above numbers are available. Refer to the following pages for further information.

KR series

Power rocker switches

Case

• **To order case only (without rocker), finish your order number with the LED wiring code.**

MODEL STRUCTURE

CASE + LEDS

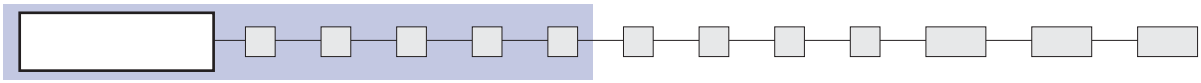



Single pole	Double pole	2-3 / 5-6		1-2 / 4-5
KR31	**KR41**	ON	-	OFF
	KR44*	ON	ON	ON
	KR44-1R*	ON	ON	MOM
KR35	**KR45**	MOM	-	ON
KR36	**KR46**	ON	-	ON
KR37	**KR47**	MOM	OFF	MOM
KR38	**KR48**	ON	OFF	MOM
KR39	**KR49**	ON	OFF	ON

* Function 4 : single pole in double pole case

Bottom view

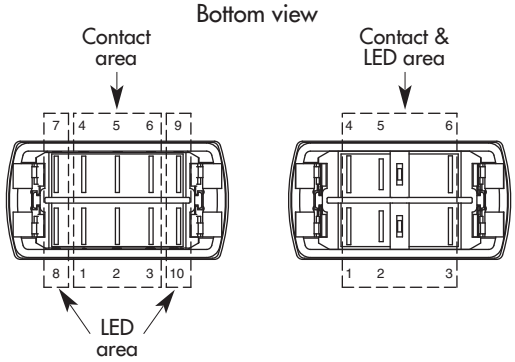

10 terminal version

6 terminal version

ELECTRICAL FUNCTIONS AND CONNECTIONS

Terminal connections as viewed from bottom of switch.
Only the contact area is represented.
For single pole models, only terminals 1, 2 and 3 are to be considered.

x = w/o terminal
o = with terminal
▲ = momentary

	Position I	Position II	Position III
	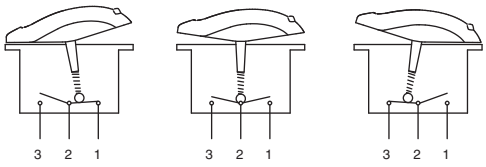		
Function 1 * KR31-KR41			
Function 5 KR35-KR45			
Function 6 KR36-KR46			
Function 7 KR37-KR47			

	Position I	Position II	Position III
	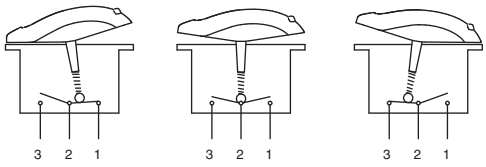		
Function 8 KR38-KR48			
Function 9 KR39-KR49			
Function 4 KR44			
Function 4-1R KR44-1R			

Function 1 only available for 6 terminal versions. Not available for illuminated versions.

TERMINALS

CASE + LEDS

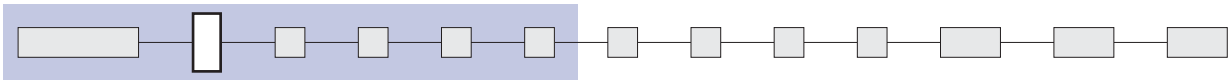

Screw

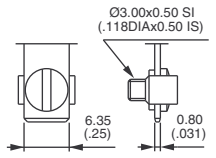

0 6 term. with barrier

Solder lug / quick-connect

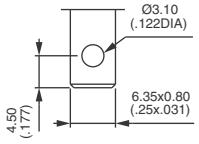

2 6 terminals with barrier
4 6 terminals w/o barrier

A 10 terminals with barrier
B 10 terminals w/o barrier
C 10 terminals for use with connector U2292

Normalized quick-connect 6,35x0,8

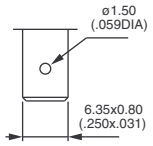

3 6 terminals with barrier
5 6 terminals w/o barrier

D 10 terminals with barrier
E 10 terminals w/o barrier
F 10 terminals for use with connector U2292

Normalized quick-connect 2,8x0,8

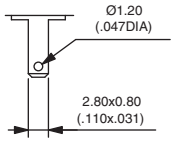

G 10 terminals with barrier
H 10 terminals w/o barrier
J 10 terminals for use with connector U2282

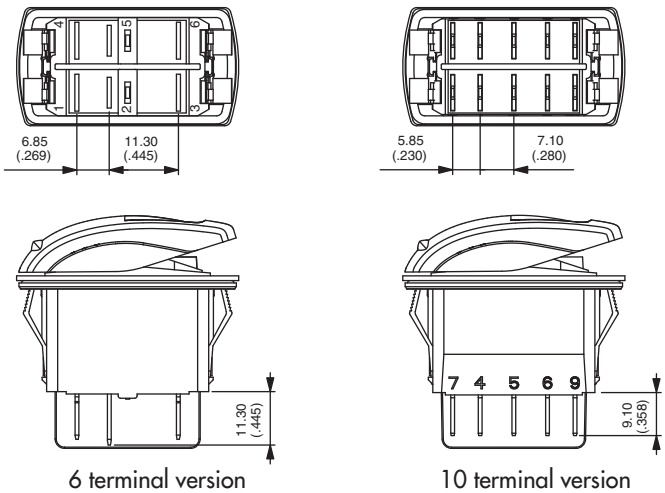

6 terminal version — 10 terminal version

Terminals are marked on the case.

The drawings show the maximum possible number of terminals.

CONTACT MATERIALS

CASE + LEDS

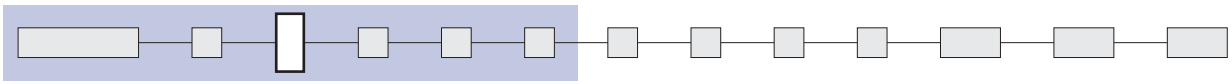

A Silver

Other contacts : consult us.

KR series

Power rocker switches

Case - LEDs

SEALING

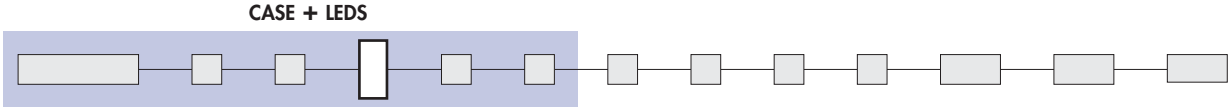

X No sealing

K IP68 (switch assembled on panel)

Ultrasonic welding of frame to case is standard on all versions.
The ultrasonic welding and the optional panel seal prevent water and dust from introducing into the switch housing.

The product shall be installed professionally.
Test conditions available on request.

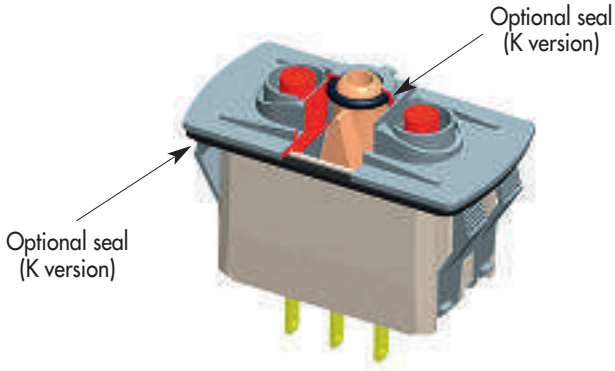

LEDS

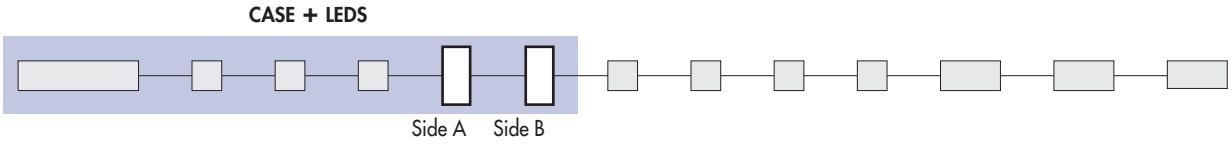

Complete each enlarged box with one of the codes listed below.

X Without LED

	Red	Green	Amber	Blue	White
6VDC	**A**	**B**	**C**	**M**	**R**
12VDC	**D**	**E**	**F**	**N**	**S**
24VDC	**J**	**K**	**L**	**P**	**T**

LED consumption : 20mA @ nominal voltage (25°C)

Other illumination solutions (neon, filament lamps) : on request.

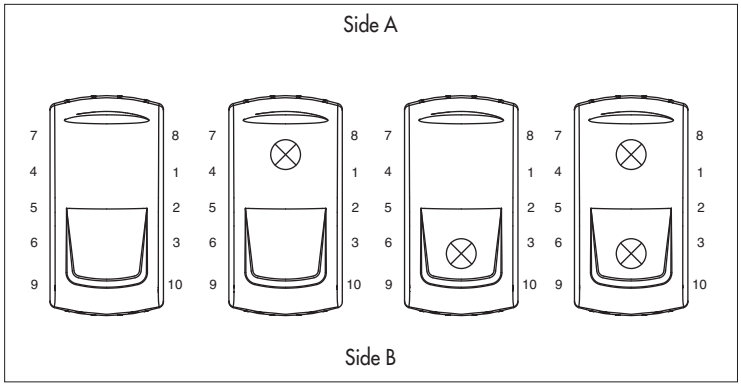

LED AND TERMINAL WIRING

The LED wiring diagram is shown on the case.

CASE + LEDS

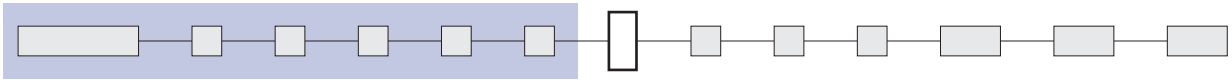

• For 6 terminal versions

LED connected to the load

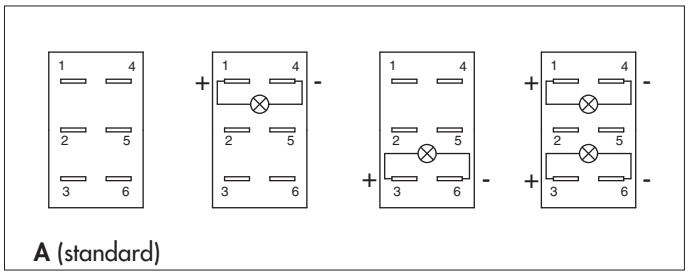

A (standard)

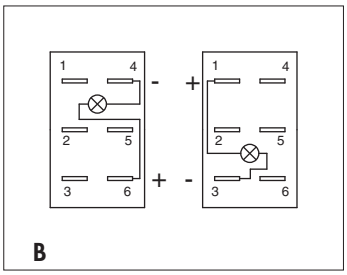

B

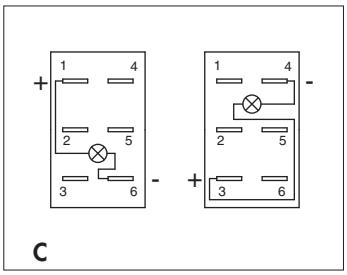

C

Note : If not available, terminals are added to connect the LED.

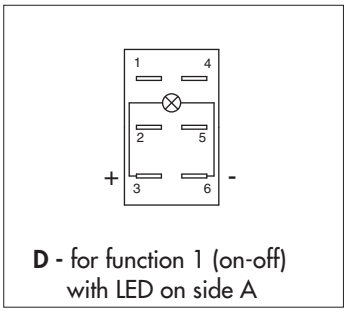

D - for function 1 (on-off) with LED on side A

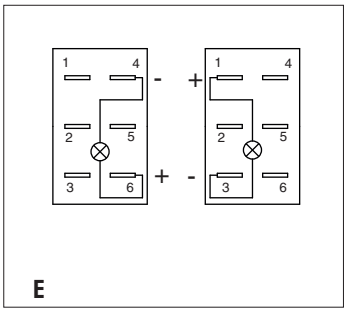

E

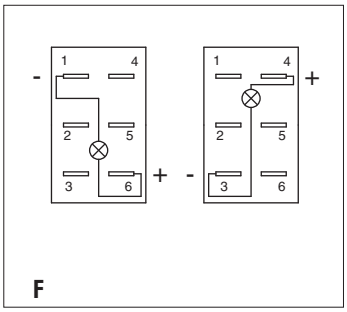

F

• For 10 terminal versions

Independent LED or integrated functions

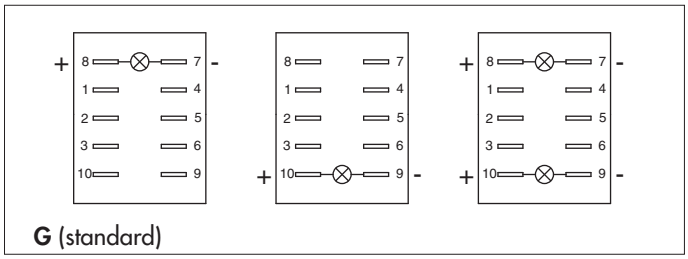

G (standard)

To have independent LEDs.

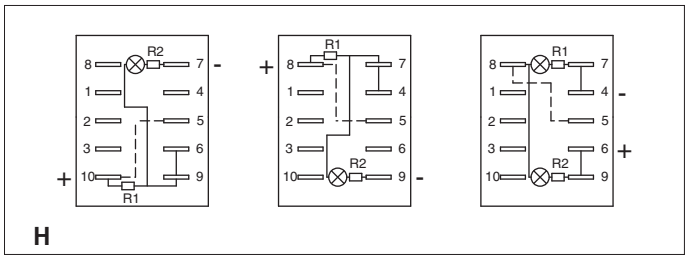

H

Available in Single Pole only, with H quick-connect terminals.

To obtain 2 symbol illumination levels (night illumination when Off and higher illumination when activated).

Dotted line = external wiring, continuous line = internal wiring

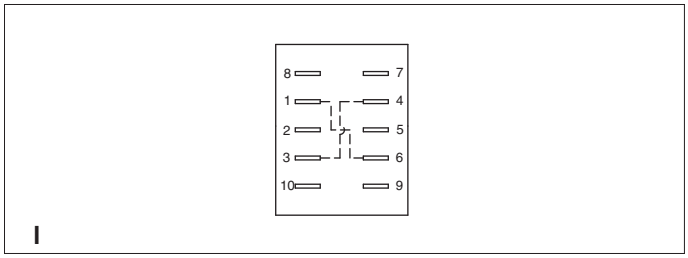

I

Power supply betweeen 2 and 5 - Load between 1 and 4 or 3 and 6.

To have a polarity inversion (typical application : fan motor).

Dotted line = internal wiring, continuous line = internal wiring

Please contact us for other wiring solutions.

KR series

Power rocker switches

Actuator - Marking

To order actuator only (without case), begin the order number with code KRR, then follow the order format from "actuator type" until the end of the options.

ACTUATOR TYPE

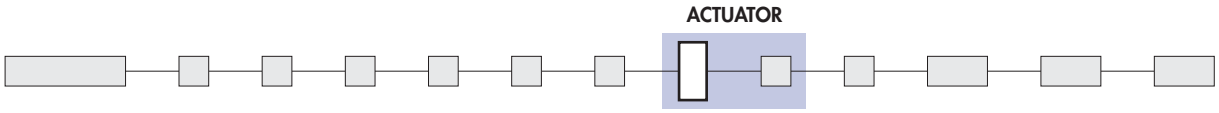



1 For non-illuminated application
2 For illuminated application

Other rocker design : on request.

ACTUATOR COLOUR

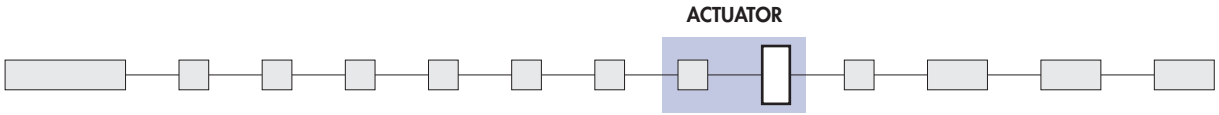

Code	Colour
1	Blue
1/4	Dark blue
2	Black
3	Green

Code	Colour
4	Grey
5	Yellow
6	Red
7	Ivory

Code	Colour
9	Orange
A	Chrome

Note : colours A, 5 and 7 not available on illuminated versions.

A **soft-touch varnish** can be added. Consult us.



MARKING ORIENTATION

If no marking required, leave box blank.

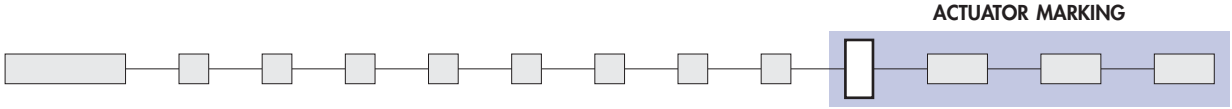

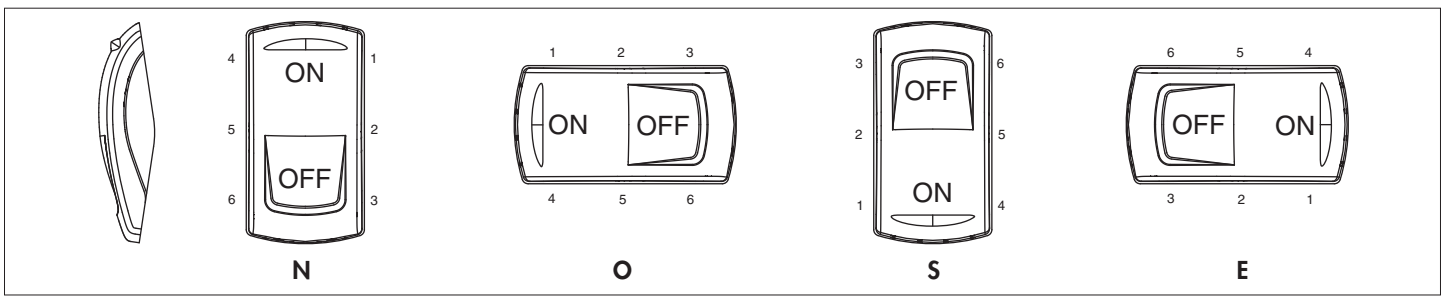

Other orientations : on request

SYMBOLS

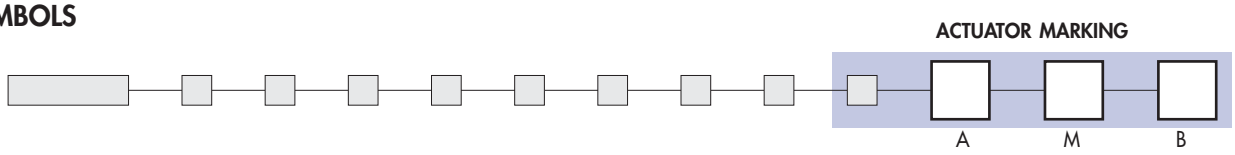

White marking for illuminated rockers and non-illuminated black rockers.
Black marking for non-illuminated colour rockers. Other : on request.
Marking in M area : on request.

Most symbols meet the ISO 7000 standard "graphical symbols for use on equipments" (code given in bracket in the description).
Contact us for symbols not featured in the following tables.

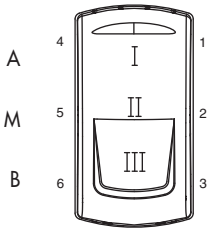

CODE	SYMBOL	DESCRIPTION
XX	None	-
01	ON	-
02	OFF	-
03	O	-
04	I	-
05	II	-
06	STOP	-
07	A	Stop
08	M	Motion
09		Up motion
10		Down motion
11		Hot
12		Cold
13		Hazard warning (0085)

CODE	SYMBOL	DESCRIPTION
14		Traveller lighting
15		Driver lighting (1421)
16		Revolving light
17		Rear ventilator
18		Heating (0637)
19		Door opening
20		Windshield demister/defroster (0635)
21		Windshield wiper (0086)
22		Windshield washer (0088)
23		Ventilator fan (0089)
24		Side mirror defroster
25		Restarting pump
26		Front fog lights (0633)
27		Rear fog lights (0634)

Marking area

For illuminated versions.
The symbol will be included in the hatched area.

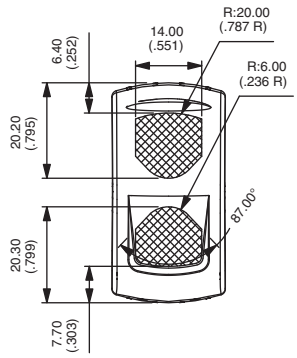

Symbol scale : 1:1 (standard).
Other : on request.

KR series

Power rocker switches

Actuator marking

SYMBOLS

ACTUATOR MARKING

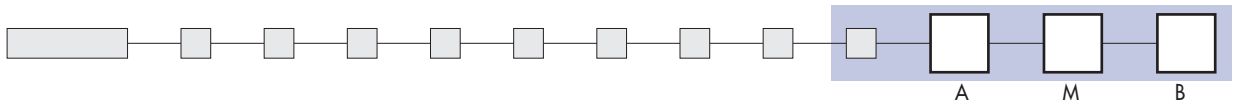

White marking for illuminated rockers and non-illuminated black rockers.
Black marking for non-illuminated colour rockers. Other : on request.
Marking in M area : on request.

Most symbols meet the ISO 7000 standard "graphical symbols for use on equipments" (code given in bracket in the description).
Contact us for symbols not featured in the following tables.

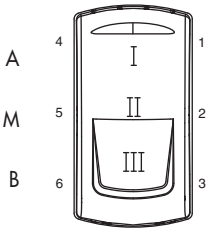

CODE	SYMBOL	DESCRIPTION
28		-
29		Beacon (1141)
30		-
31		Electric motor (0011)
32		Emergency first aid vehicle (2565)
33		Load tipping (1557)
34		Loading light (2457)
35		Tractor, rear-ward (0089)
36		Combine, direction of movement (1678)
37		Use no forks (2406)
38		Transmission (1166)
39		Working spot light (1145)
40		Engine (0634)
41		Horn (0244)

CODE	SYMBOL	DESCRIPTION
42		Lock (1656)
43	TAXI	Taxi sign light (2551)
44		Flood light (1024)
45		-
46		-
47	ASM	-
48		-
49		Differential lock (1662)
50	TOP	-
51	1000	-
52	540E	-
53	N	-
54		Rear window wiper (0097)
55		Rear window washer (0099)

Symbol scale : 1:1 (standard).
Other : on request.

CODE	SYMBOL	DESCRIPTION
56		Lower load (2223)
57		Cab lock (1560)
58		Extraction
59		Pumping in
60		Rear PTO (1572)
61		Front PTO
62		Rockshaft down
63		Rockshaft up
64		Indicator

SWITCH PANEL CUT-OUT

Recommended panel thickness : between 2 mm and 3,5 mm

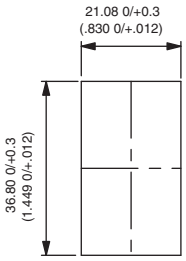

MATRIX MOUNTING

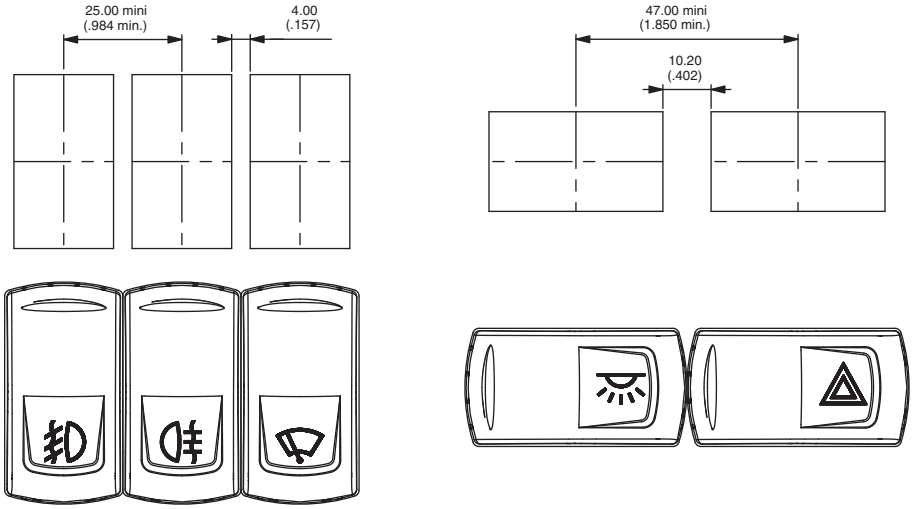

MOUNTING PANEL END

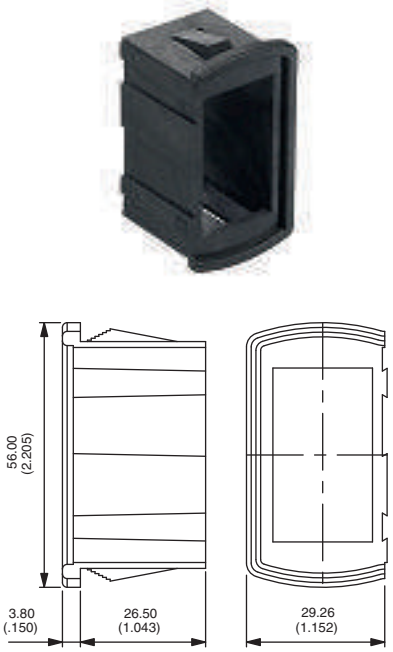

U2261

MOUNTING PANEL MIDDLE

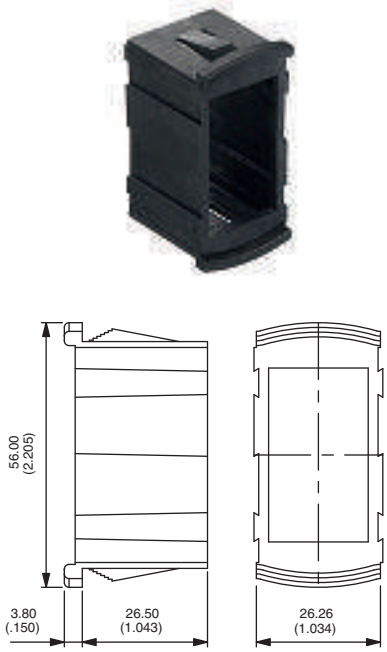

U2262

SINGLE MOUNTING PANEL

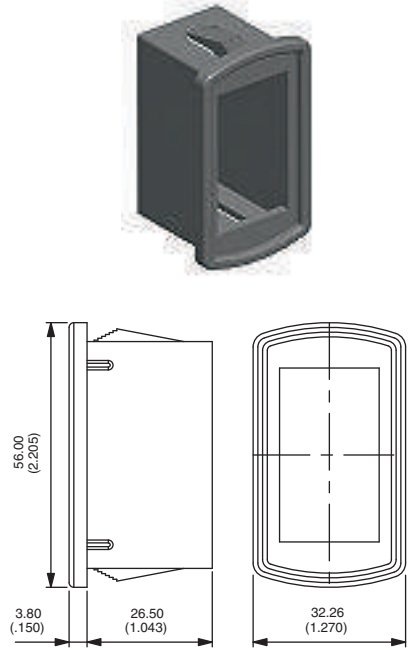

U2267

Recommended panel thickness : 1,10 mm - 1,80 mm - 2,60 mm - 3,40 mm - 4,20 mm - 5 mm - 5,80 mm

MOUNTING PANEL CUT-OUT

For additional elements, add 26,40 mm (1.039)

For 1 element U2267

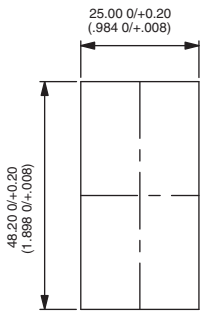

For 2 elements U2261

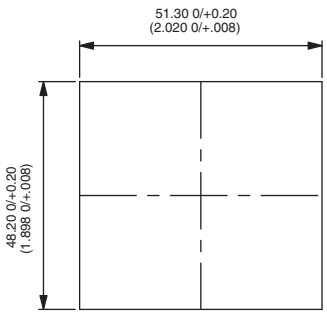

For 3 elements (2xU2261 + 1x U2262)

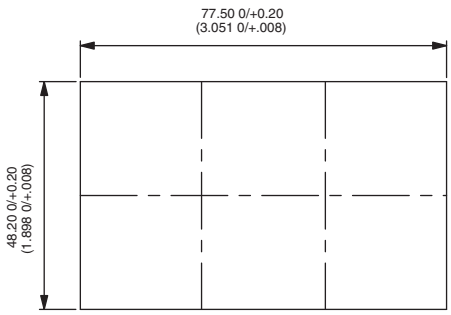

CONNECTORS

Standard colour : black. Other colours : on request.

Connectors cannot be combined with wiring types H and I.



U2260

6 terminal version
For use with terminals type 2, 3, 4 or 5.
6,35 (1/4) tabs to be fitted by the user
(example : AMP/Tyco 0-0141013-2).
Can be used for the KG series.



U2282

10 terminal version
For use with terminals type G, H or J.
2,8 (.110) tabs to be fitted by the user
(example : AMP/Tyco 0-927779-3).



U2292

10 terminal version
For use with terminals type A, B, C, D, E, F.
6,35 (1/4) tabs to be fitted by the user
(example : AMP/Tyco 0-0141013-0).

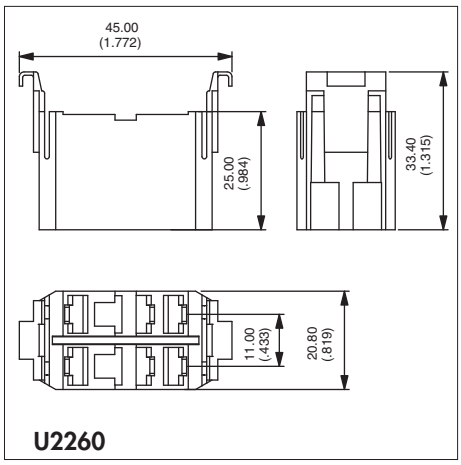

U2260

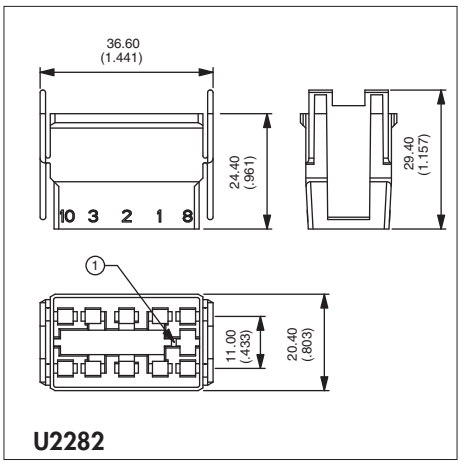

U2282

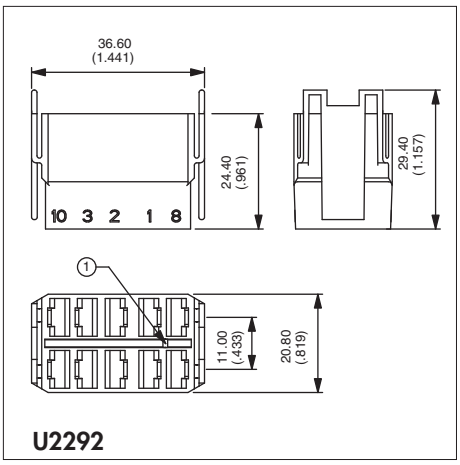

U2292

① poka-yoke

HOLE PLUG

Usefull for future extensions.

Code	Colour
U2271	Blue
U2271/4	Dark blue
U2272	Black
U2273	Green

Code	Colour
U2274	Grey
U2275	Yellow
U2276	Red
U2277	Ivory

Code	Colour
U2279	Orange



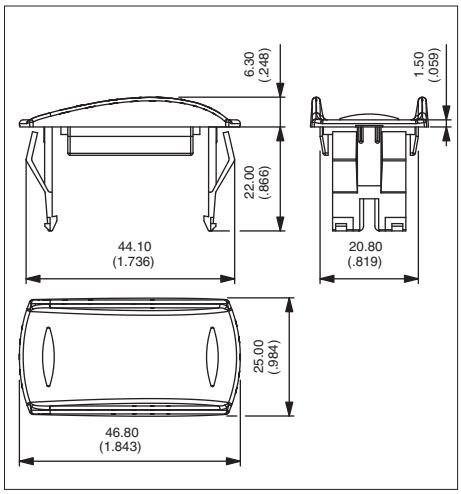

Recommended panel thickness :
1,50 mm to 6 mm

ACTUATOR REMOVING TOOL



U3052

2 tools are supplied

EXTRACT ACTUATOR
Allows the extraction of the rocker / rocker support assembly.
Place the 2 claws under the support and push as indicated by the arrow.

EXTRACT ROCKER
Allows to separate the rocker from its support.
Insert the tool between rocker and support as indicated by the arrrow. Pull out the tool in the opposite direction.

EXTRACT SWITCH
Allows to extract switch from panel mounting units. 2 tools are necessary.
Insert the tools between switch and panel mounting units from the rear to compress the snap-in device. Pull off switch manually.

APEM,
a world of switching capabilities

The APEM group is one of the world's largest manufacturers of switches, switch panels and joysticks.

APEM designs, develops, manufactures and sells electro-mechanical components to multiple industrial markets including: instrumentation, medical, security, communications, industrial automation, avionics, military and transport.

Other APEM embedded products



" I " range of pushbuttons

This range consists of several series of IP67 sealed pushbuttons (IP, IB, IS, IF, IA) and a large variety of models: round or square, momentary or latching, illuminated or non-illuminated, plastic or metallic, with optional marking.



Specific switch panels

In addition to the switching function, specific switch panels incorporate several other functions such as illumination by LED, backlighting, EMC protection, sealing, connection, support, mounting...

Applications for these products include transport and utility vehicles, agricultural engines and boats.



Joysticks

APEM also manufactures joysticks for professional applications. Easy to operate, reliable and designed for extremely long service life, APEM joysticks are offered with a wide range of options allowing to satisfy a large variety of requirements. Several series are available, each one based on a different technology: switch joysticks, potentiometer joysticks and contactless joysticks.

A P E M

Addresses of sales subsidiaries and distributors network on

www.apem.com

KR0711R1-A