Photoelectric sensor

T30-SP6-R-Q

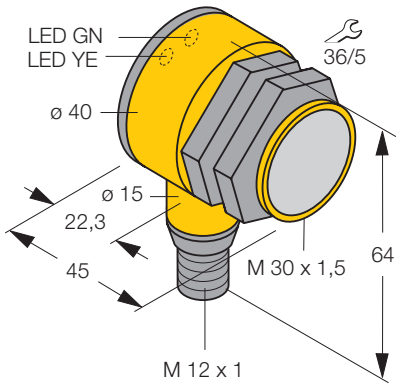

- **Opposed mode (receiver)**
- **Connector, *eurofast*®**
-

Wiring diagram

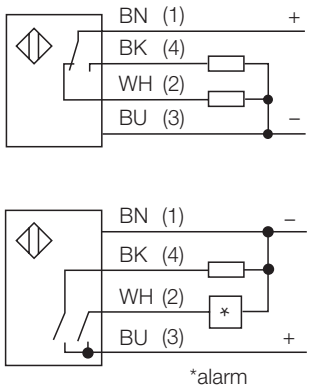

Type	T30-SP6-R-Q
Ident-No.	3467900
Operating mode	Opposed mode (receiver)
Type of light	IR
Wave length	950 nm
Range	≤ 60 m
Rated operational voltage (DC) U_B	10... 30 VDC
Rated operational current (DC) I_e	≤ 150 mA
No-load current I_0	≤ 25 mA
Short-circuit protection	yes, cyclic
Reverse polarity protection	yes
Output function	normally open / normally closed, PNP
Max. switching frequency	≤ 0,16 kHz
Max. switch-on delay	≤ 100 ms
Overload trip point	>220 mA
Degree of protection	IP 67
Operation temperature	-40...+ 70 °C
Housing style	cylindrical/thread; T30
Dimensions	64 x 45 mm
Housing material	plastic, PBT
Lens	Lexan
Wiring	connector
Supply voltage indication	LED green
Switching status indication	LED yellow
Error indication	LED green blinkend
Alarm indication	LED yellow blinkend

Function principles
Excess gain curve

Excess gain in relation to the distance

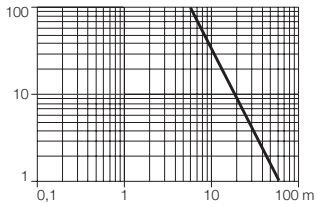

Subject to change without notice • © Hans Turck GmbH & Co.KG 2002 • Edition: • 29.11.2002

Hans Turck GmbH & Co.KG • Postfach • D-45466 Mülheim an der Ruhr • Telefon 02 08/49 52-0 • Telefax 02 08/49 52-264