Spherical roller bearings, cylindrical and tapered bore

Principal dimensions			Basic load ratings		Fatigue load limit	Speed ratings		Mass	Designation
			dynamic	static		Reference speed	Limiting speed		
d	D	B	C	C_0	P_u				* - SKF Explorer bearing
mm			kN		kN	r/min		kg	-
65	120	31	193	216	24	5000	7000	1,50	22213 EK *

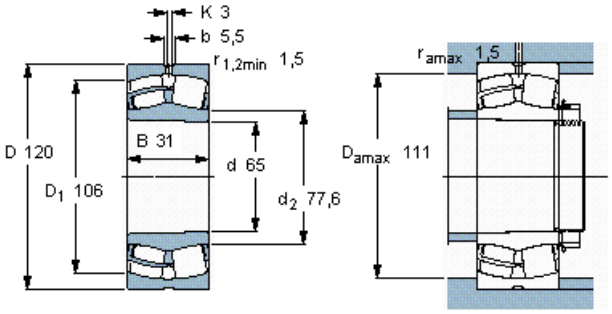

Tapered bore, taper
1: 12

Calculation factors

e 0,24
Y_1 2,8
Y_2 4,2
Y_0 2,8