Product Data Sheet

9292512004
VWC0060JUECS
614 JH

ebmpapst
The engineer's choice



GREEN TECH

614 JH

INDEX

1 General 3
2 Mechanics 3
2.1 General 3
2.2 Connections 3
3 Operating Data 4
3.1 Electrical Operating Data 4
3.2 Electrical Features 5
3.3 Aerodynamics 6
3.4 Sound Data 7
4 Environment 7
4.1 General 7
4.2 Climatic Requirements 7
4.3 EMC 7
5 Safety 9
5.1 Electrical Safety 9
5.2 Approval Tests 9
6 Reliability 9
6.1 General 9

1 General

Fan type	Fan	
Rotating direction looking at rotor	Clockwise	
Airflow direction	Air outlet over struts	
Bearing system	Ball bearing	
Mounting position - shaft	Any	

2 Mechanics

2.1 General

Width	60,0 mm	
Height	60,0 mm	
Depth	32,0 mm	
Mass	0,100 kg	
Housing material	Plastic	
Impeller material	Plastic	
Max. torque when mounted across both mounting flanges Screw size	Wire outlet corner: 60 Ncm Remaining corners: 70 Ncm ISO 4762 - M4 degreased, without an additional brace and without washer	

2.2 Connections

Electrical connection	Wires	
Lead wire length Tolerance	L = 310 mm +- 10,0 mm	

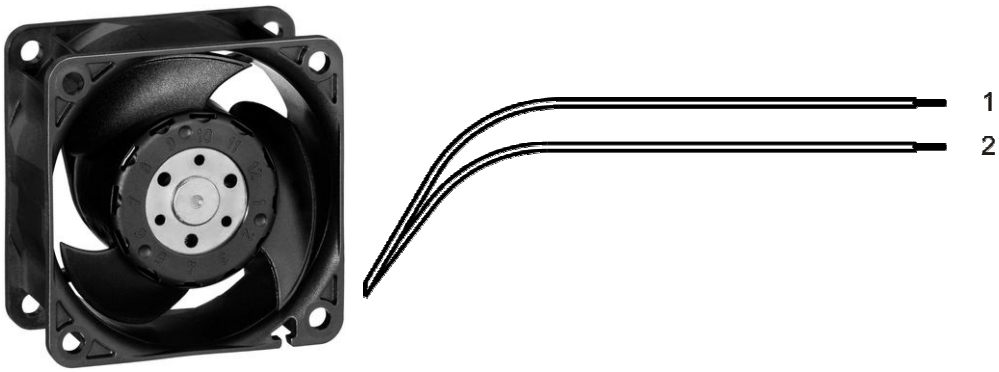

Wire	Color	Operation	Wire size	Insulation diameter
1	red	+ UB	AWG 24	1,50 mm
2	blue	- GND	AWG 24	1,50 mm

3 Operating Data

3.1 Electrical Operating Data

Measurement conditions: Normal air density = 1,2 kg/m3; Temperature 23℃ +/ - 3℃; Motor axis horizontal; warm-up time before measuring 5 minutes (unless otherwise specified). In the intake and outlet area should not be any solid obstruction within 0,5 m.

Δp = 0: corresp. to free air flow (see chapter aerodynamics)
I: corresp. to arithm. mean current value

Features	Condition	Symbol	Values		
Voltage range		U	14,0 V		26,4 V
Nominal voltage		U_N		24,0 V	
Power consumption Tolerance	Δp = 0 0010	P	2,3 W +- 17,5 %	7,7 W +- 12,5 %	8,7 W +- 15,0 %
Current consumption Tolerance	Δp = 0 0010	I	165 mA +- 17,5 %	320 mA +- 12,5 %	330 mA +- 15,0 %
Speed Tolerance	Δp = 0 0010	n	7.000 1/min +- 12,5 %	11.700 1/min +- 7,5 %	12.400 1/min +- 10,0 %
Starting current consumption				< 1.300 mA	

3.2 Electrical Features

Electronic function	None	
Reversed polarity protection Max. residual current at U_N	Rectifying diode I_F < 100 uA	
Locked rotor protection	Auto restart	
Locked rotor current at U_N	I_{block} approx. 1.300 mA	
Clock signal at locked rotor	t_3 / t_4 typical: 0,15 s / 8,2 s	

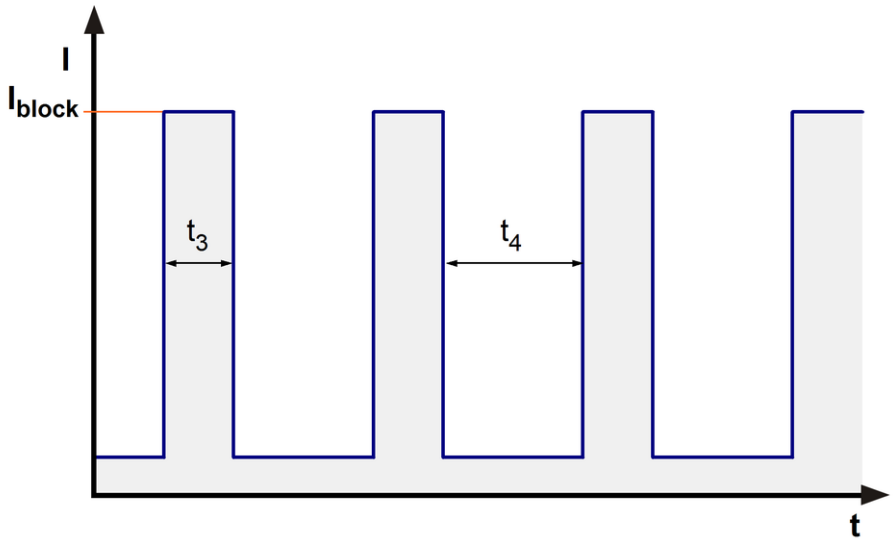

3.3 Aerodynamics

Measurement conditions:	Measured with a double chamber intake rig acc. to DIN EN ISO 5801. Normal air density = 1,2 kg/m3; Temperature 23℃ +/ - 3℃; In the intake and outlet area should not be any solid obstruction within 0,5 m. Motor shaft horizontal. The information is only valid under the specified test conditions and may be changed by the installation conditions. If there are deviations from the standard test conditions, the characteristic values must be checked under the installed conditions.

a.) Operation condition:

11.700 1/min at free air flow

Max. free-air flow (Δp = 0 / V̇ = max.)	70,0 m3/h	
Max. static pressure (Δp = max. / V̇ =0)	345 Pa	

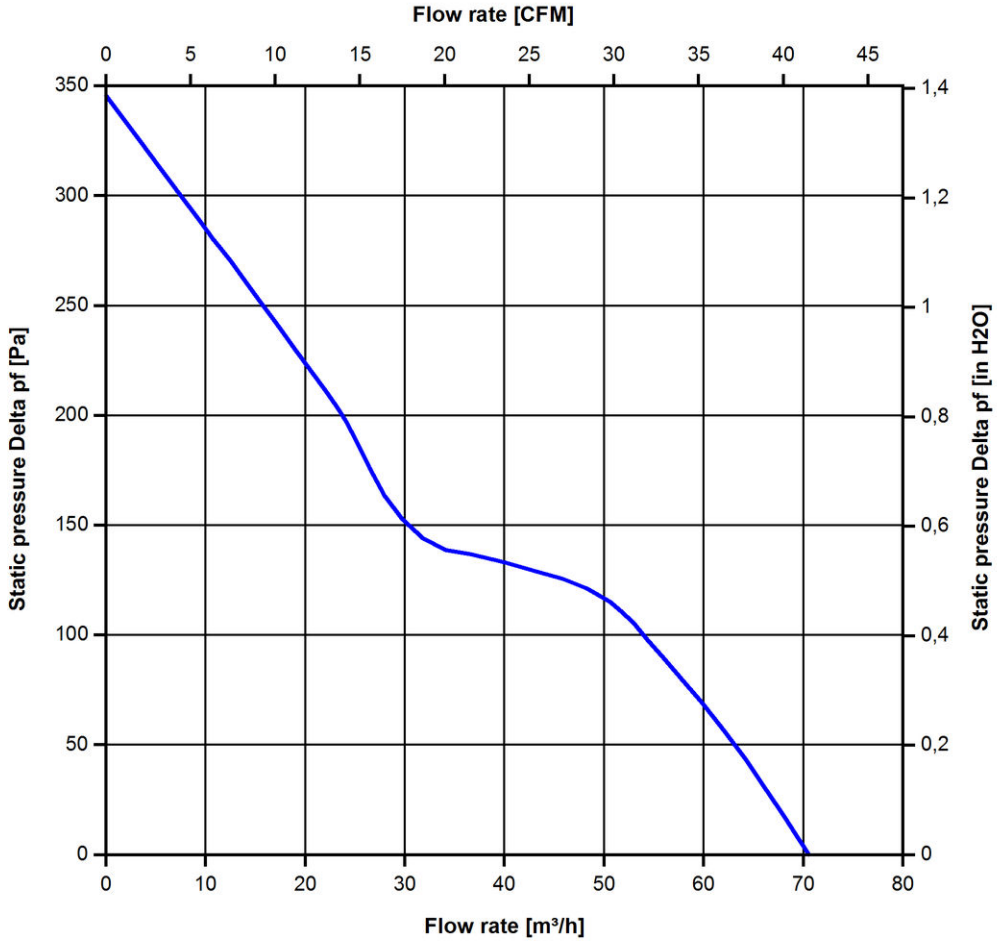

3.4 Sound Data

Measurement conditions:	Sound pressure level: 1 meter distance between microphone and the air intake. Sound power level: Acc. to DIN 45635 part 38 (ISO 10302) Measured in a semianchoic chamber with a background noise level of Lp(A) < 5 dB(A) For further measurement conditions see chapter aerodynamics.

a.) Operation condition:

11.700 1/min at free air flow

Optimal operating point	46,0 m3/h @ 110 Pa	
Sound power level at the optimal operating point	6,4 bel(A)	
Sound pressure level at free air flow, measured in rubber bands	53,0 dB(A)	

4 Environment

4.1 General

Min. permitted ambient temperature TU min.	-20 ℃	
Max. permitted ambient temperature TU max.	70 ℃	
Min. permitted storage temperature TL min.	-40 ℃	
Max. permitted storage temperature TL max.	80 ℃	

4.2 Climatic Requirements

Humidity requirements	humid heat, constant; according to DIN EN 60068-2-78, 14 days	
Water exposure	None	
Dust requirements	None	
Salt fog requirements	None	

Permitted application area:
The product is intended for use in sheltered rooms with controlled temperature and controlled humidity. Directly exposure to water must be avoided.

Pollution degree 1 (according DIN EN 60664-1)
There is either no pollution or it occurs only dry, non-conductive pollution. The pollution has no negative impact.

Please require severity levels and specification parameters from the responsible development departments.

4.3 EMC

Kind	**Radiated Emission; 30 MHz - 1000 MHz**
According	DIN EN 55032:2016-02
Ceck accuracy / Limit	Class B
Result	Below limit Class B

Kind	**Electrostatic Discharge Immunity Test**
According	DIN EN 61000-4-2:2001-12
Ceck accuracy / Limit	Contact Discharge +/- 4 kV; Air Discharge +/- 8 kV
Result	A: The monitored function operates as designed during and after exposure to a disturbance.

5 Safety

5.1 Electrical Safety

Dielectric strength DIN EN 60950 (VDE 0805) and DIN EN 60335 (VDE 0700) A.) Type test Measuring conditions: After 48h of storage at 95% R.H. and 25℃. No arcing or breakdown is allowed! All connections together to ground. B.) Routine test Measuring conditions: At indoor climate. No arcing or breakdown is allowed! All connections together to ground.	500 VAC / 1 Min. 850 VDC / 1 Sec.	
Isolation resistance Measuring conditions: After 48h of storage at 95% R.H. and 25℃ measured with U=500 VDC for 1 min.	RI > 10 MOhm	
Clearance / creepage distance	1,0 mm / 1,2 mm	
Protection class	III	

5.2 Approval Tests

CE	EC Declaration of Conformity	Yes
EAC	Eurasian Conformity	Yes
UL	Underwriters Laboratories	Yes / UL507, Electric Fans E38324
VDE	Association for Electrical, Electronic and Information Technologies	Yes / Approval acc. to EN 60950 (VDE 0805) - Information technology equipment
CSA	Canadian Standards Association	No
CCC	China Compulsory Certification	Not applicable

6 Reliability

6.1 General

Life expectancy L10 at TU = 40 ℃	57.500 h	
Life expectancy L10 at TU max.	27.500 h	
Life expectancy L10 acc. to IPC 9591 at TU = 40 ℃	97.5 00 h	

Copying of this document, and giving it to others and the use or communication of the contents thereof, are forbidden without express authority. Offenders are liable to the payment of damages. All rights are reserved in the event of the grant of a patent or the registration of a utility model or design.

Schutzvermerk nach DIN ISO 16016 beachten/
Refer to protection notice DIN ISO 16016!

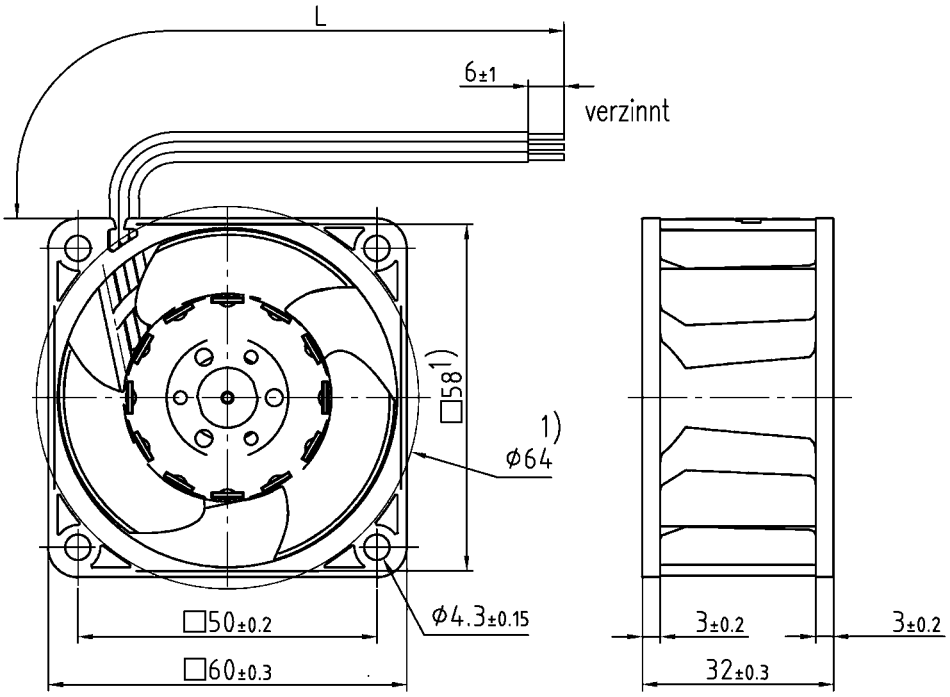

Flanschseite

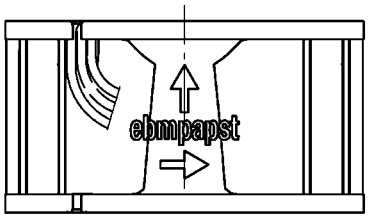

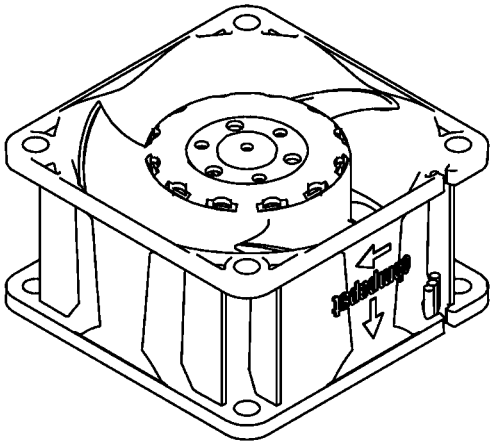

Anzahl und Länge der Litzen s. Bv.Bl.1

1) Maße für Montagewand

Axialspiel bei
- Kugellagerung (K): 0 (mit Federausgleich)

Tolerierung/Tolerances: DIN 7167 Allgemeintoleranzen/ Gen. tolerances:				
	Datum/Date	Name/Name		Artikel/Title
Bearb./Drawn:				
	Index/Index	Aend.-Nr./Change-No.	ebmpapst	Zchg.-Nr./ Dwg.-No.:
gepr. u. zur Verwendung freigegeben/Checked for release von by am on			ebm-papst St. Georgen GmbH & Co. KG	Ers.f.Zchg./ Replaces:

Massstab/scale

Blatt/Page

A4

12/03