E12711

Damping magnet

MAGNET M4.1 IATA E11803 5X

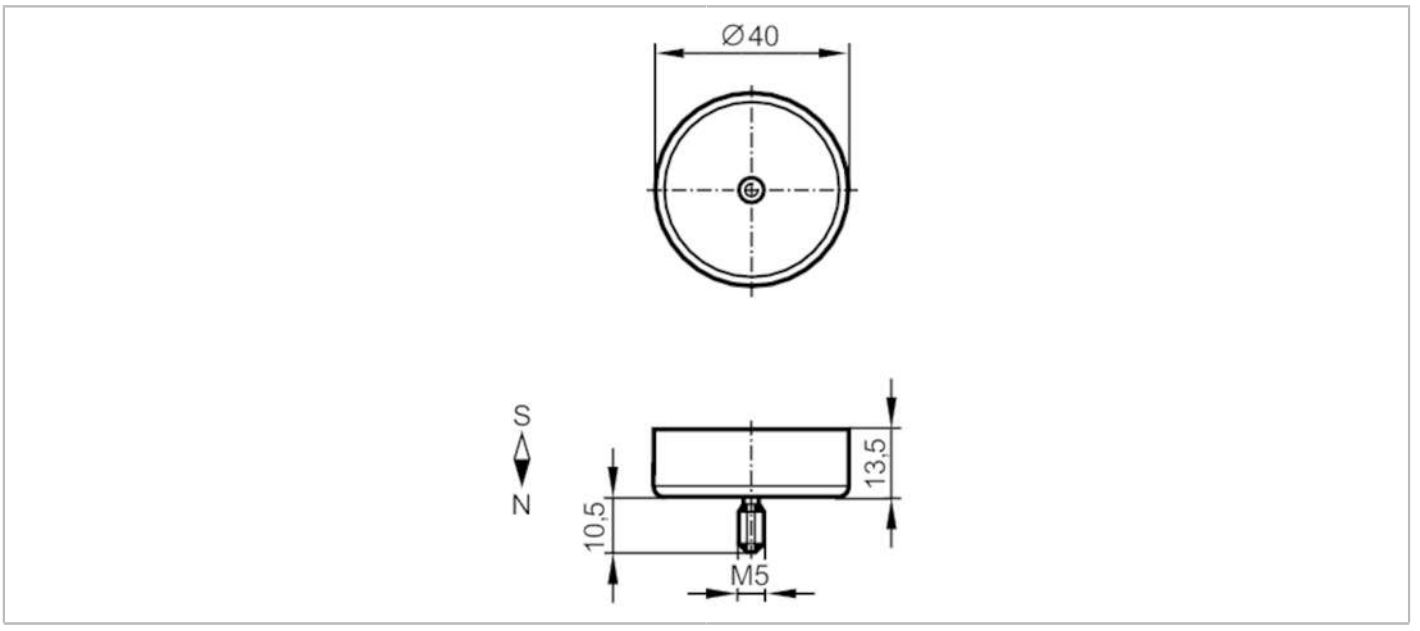

Operating conditions		
Ambient temperature	[°C]	-25...250
Mechanical data		
Weight	[g]	478.1
Dimensions	[mm]	Ø 40 / L = 13
Materials		hard ferrite HF 24/23; stainless steel (1.4571/316Ti)
Magnetic field strength	[mT]	80
Remarks		
Pack quantity		5 pcs.