Brand of NTN corporation

Technical data

UCFE213

Bearing units



Grey cast housing, radial insert ball bearing with socket set screws,seal with slinger

KIT CONTENT

UC213G2, FE213

VISUAL (S)

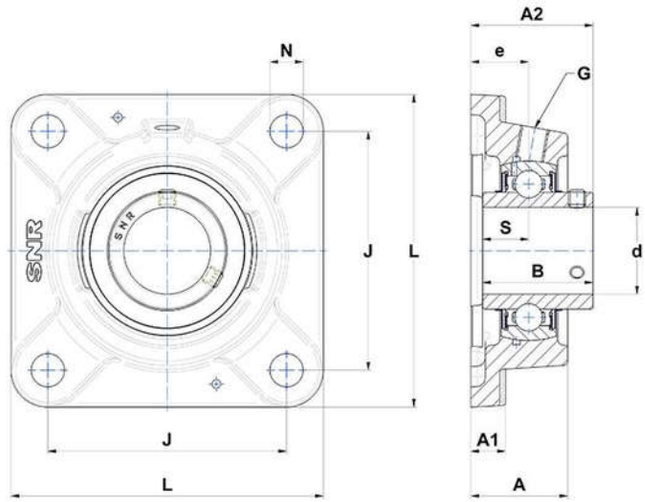

PRODUCT DEFINITION

Brand	SNR
A - Housing height	56 mm
A1 - Housing foot height / flange height	18 mm
A2 - Total height from mounting surface	77,7 mm
B - Width of Inner Ring	65,1 mm
d - Shaft diameter	65 mm

PRODUCT DEFINITION	
e - Distance mounting surface to bearing center	38 mm
G - Grease fitting	R1/8"
J - Mounting holes distance	150 mm
L - Housing width / diameter	188 mm
N - Mounting hole dimension	18 mm
S - Distance front side/bearing centre	25,4 mm

PRODUCT PERFORMANCE	
C - Dynamic load rating	57200000 mN
C0 - Static load rating	40000000 mN
Operating temperature min.	253,15 °K
Operating temperature max.	373,15 °K

OTHER FEATURES	
Mass	6,34 kg
Recommended tightening torque for set screw	33 N-m