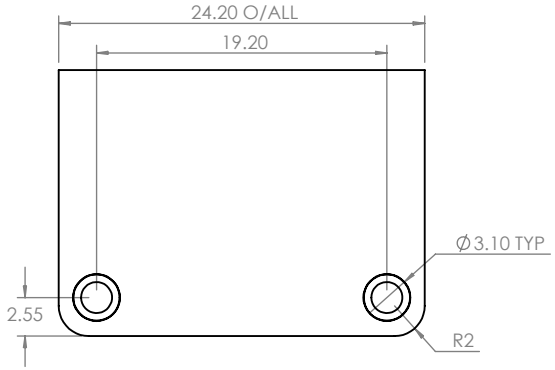

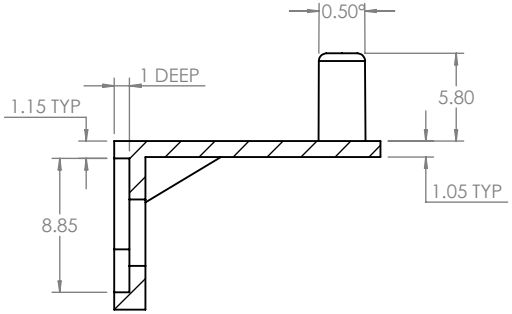

SECTION A-A

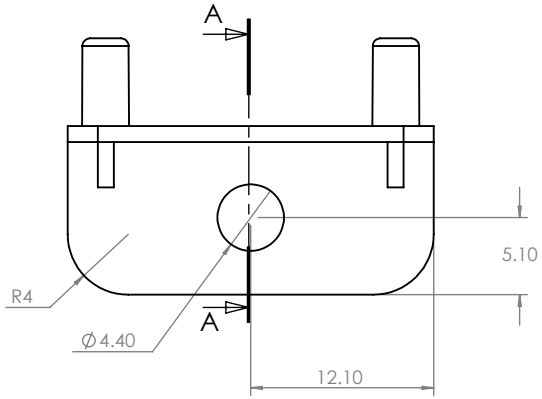

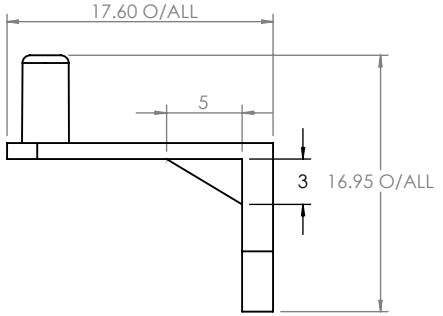

ISO VIEW
2:1

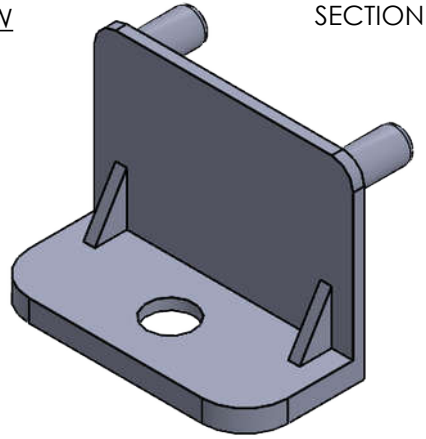

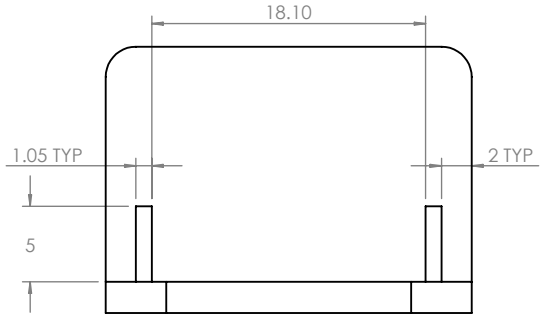

REV	DATE	ECR	CHANGE NOTE	NAME	CHK'D
-	-	-	-	-	-
-	-	-	-	-	-
A	01/12/21	970	UPDATE TO MATERIAL AND COLOUR	I.P	S.J.H
O	03/01/12	-	FIRST DRAWN	MJW	-

CAMDENBOSS
CONNECT. ENCLOSE. INNOVATE.

DRAWING UNITS: MILLIMETERS
TOLERANCES +/- 0.2

PROJECTION.

COLOUR. GREY	GAUGE -	DO NOT SCALE DRAWING DEBURR AND BREAK SHARP EDGES	SHEET 1 OF 1
FINISH. SMOOTH	TITLE: GENERAL DRAWING FOR CIME WALL MOUNT		SCALE. 2:1
MATERIAL. PA6 FR (30)	DWG NO. CIME-M-MPR		A4