Technical Data
Foot-switch

Series F1

Description **F1-AU0-10V** Article number **6161500724**

Wiring diagram

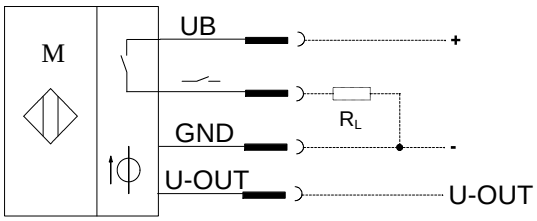

Characteristic

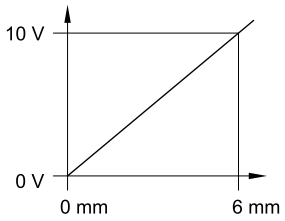

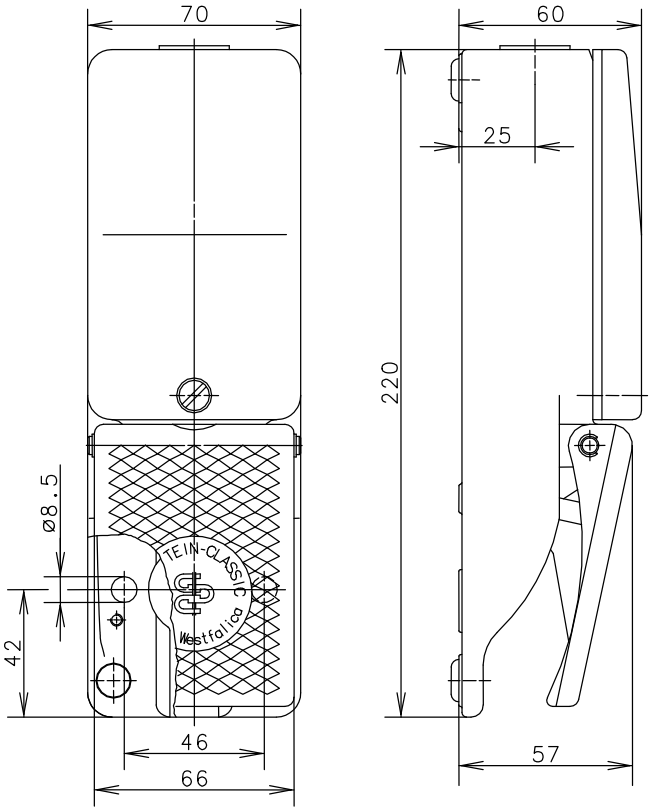

Electrical data		
Rated operational voltage	U_e	12-26 V DC
Utilization category		DC-13 U_e /I_e 12-26 DC / 0,2 A acc. to IEC/EN 60947-5-2
Current output		0-10 V DC
Short-circuit protection type switching element		permanently short-circuit and overload protected, clocking
Protection class		III

This document will not become the contractual basis; the details included herein do not constitute any descriptions of expected conditions, so that warranties/claims for defects on account of possible variations of the actual qualities from the qualities described herein are explicitly excluded. All rights reserved. Specifications subject to change without notice!

Technical Data
Foot-switch

Mechanical data	
Enclosure	AL, die-cast
Cover	AL, die-cast
Actuator	Foot lever (PA)
Ambient air temperature	-30 °C to +80 °C
Contact type	PNP N.O., teachbar of 0,1 - 5,9 mm
Operating force – Pedal	approx. 10 N (pedal centre)
Mechanical life	10 x10^6 operating cycles
Switching frequency	max. 50/min
Assembly	2 x M8
Connection	screw connections (M3,5)
Number of connections	4
Conductor cross-sections	Solid: 0,5 – 1,5 mm^2
	Litz wire with or without ferrules: 0,5 – 1,5 mm^2
Cable entrance	1 x M20x1,5
Weight	approx. 1,5 kg
Protection type	IP65 in accordance with IEC/EN 60529

Regulations	EN 60947-5-2
EU Conformity[1)]	acc. to directive 2004/108/EC

Notes

The degree of protection specified (IP code) applies only to a properly closed cover and the use of an equivalent cable gland with adequate cable.

[1)]To be conform with the EMV guideline (2004/108/EC) a shielded connection cable has to be used.

This document will not become the contractual basis; the details included herein do not constitute any descriptions of expected conditions, so that warranties/claims for defects on account of possible variations of the actual qualities from the qualities described herein are explicitly excluded. All rights reserved. Specifications subject to change without notice!