VARIMETER
Thermistor Motor Protection Relay
MK 9052

0225240

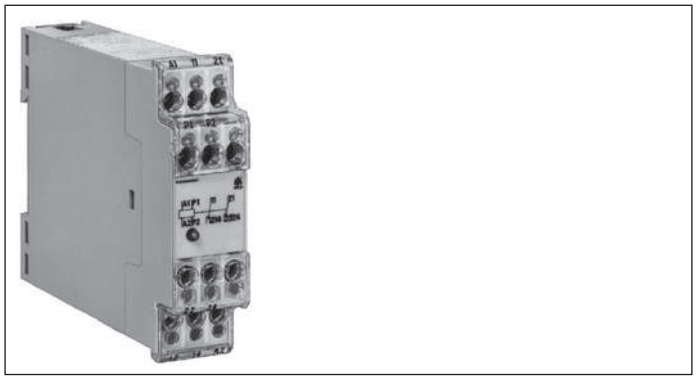

- According to IEC/EN 60947-8
- 1 input for PTC-resistors or bimetal contacts
- Broken wire detection in sensor circuit
- Optionally with no voltage reclosing interlock to VDE 0113 § 5.4.2
- Closed circuit operation
- 1 or 2 changeover contacts
- Width 22.5 mm

Function Diagram

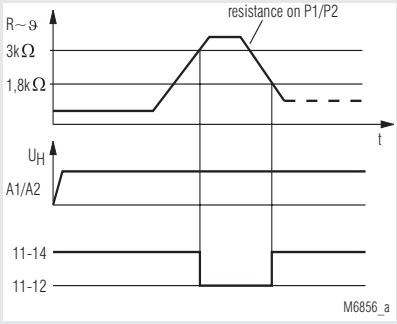

Approvals and Markings

CE

Applications

To protect against thermal overload of motors caused by high switching frequency, heavy duty starting, phase failure on one phase, bad cooling, high ambient temperature.

Circuit Diagrams

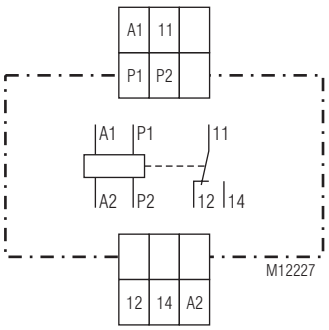

MK 9052.11

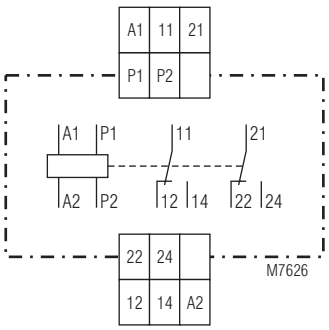

MK 9052.12

Function

The motor protection relay MK 9052 is used to detect thermal overload. Special PTC-resistors are used as sensors for motor protection. Up to 6 sensors can be connected in series. When reaching a certain resistance the output relay of the MK 9052 is switched off.
An LED indicates the contact state. The motor protection relay works with open circuit operation and also detects broken wire in the sensor circuit.

Connection Terminals

Terminal designation	Signal description
A1, A2	Operating voltage
P1, P2	Thermistor input
11, 12, 14; 21, 22, 24	Change over contacts

All technical data in this list relate to the state at the moment of edition. We reserve the right for technical improvements and changes at any time.

Technical Data

Input

Response value:	≥ 3 kΩ
Release value:	≤ 1.8 kΩ
Number of sensors:	1 ... 6 pcs
Loading of measuring circuit:	approx. 1 mW (at R = 1.5 kΩ)
Measuring voltage:	approx. 1.2 V (at R = 1.5 kΩ)

Auxiliary Circuit

Auxiliary voltage U_H:	AC 24, 42 , 48, 110, 127, 230, 240 V
Voltage range of U_H:	0.9 ... 1.1 U_H
Nominal consumption:	1.8 VA
Nominal frequency of U_H:	50 / 60 Hz

Output

Contacts		
MK 9052.11:	1 changeover contact	
MK 9052.12:	2 changeover contacts	
Operate delay:	< 20 ms	
Release delay:	< 15 ms	
Thermal current I_{th}:	5 A	
Switching capacity		
to AC 15		
NO contact:	3 A / AC 230 V	IEC/EN 60947-5-1
NC contact:	1 A / AC 230 V	IEC/EN 60947-5-1
Electrical life		IEC/EN 60947-5-1
to AC 15 at 3 A, AC 230 V:	8 x 10^5 switching cycles	
Short-circuit strength		
max. fuse rating:	4 A gG / gL	
Mechanical life:	> 20 x 10^6 switching cycles	

General Data

Operating mode:	Continuous operation	
Temperature range		
Operation:	- 20 ... + 60 °C	
Storage:	- 20 ... + 60 °C	
Altitude:	< 2000 m	
Clearance and creepage distances		
Rated impulse voltage / pollution degree:	4 kV / 2	IEC 60664-1
EMC		
Electrostatic dicharge:	8 kV (air)	IEC/EN 61000-4-2
HF irradiation		
80 MHz ... 1.0 GHz:	10 V / m	IEC/EN 61 000-4-3
1.0 GHz ... 2.0 GHz	3 V / m	IEC/EN 61 000-4-3
2.0 GHz ... 2.7 GHz:	1 V / m	IEC/EN 61 000-4-3
Fast transients:	2 kV	IEC/EN 61000-4-4
Surge voltages between		
wires for power supply:	1 kV	IEC/EN 61000-4-5
between wire and ground:	2 kV	IEC/EN 61000-4-5
HF wire guided:	10 V	IEC/EN 61000-4-6
Interference suppressions:	Limit value class B	EN 55011
Degree of protection		
Housing:	IP 40	IEC/EN 60529
Terminals:	IP 20	IEC/EN 60529
Housing:	Thermoplastic with V0 behaviour according to UL subject 94	
Vibration resistance:	Amplitude 0.35 mm, frequency 10 ... 55 Hz,	IEC/EN 60068-2-6
Climate resistance:	20 / 060 / 04	IEC/EN 60068-1
Terminal designation:	EN 50005	
Wire connection:	2 x 2.5 mm² solid or 2 x 1.5 mm² stranded wire with sleeve DIN 46228-1/-2/-3/-4	
Wire fixing:	Flat terminals with self-lifting clamping piece	IEC/EN 60999-1
Fixing torque:	0.4 Nm	
Mounting:	DIN rail	IEC/EN 60715
Weight:	145 g	

Dimensions

Width x height x depth:	22.5 x 82 x 99 mm

Standard Type

MK 9052.11 AC 230 V 50 / 60 Hz

Article number:	0023171
• Output:	1 changeover contact
• Auxiliairy Voltage U_H:	AC 230 V
• Width:	22.5 mm

Variant

MK 9052._ _ /100:	with electro-magnetic reclosing interlock (manual reset function). When the response temperature is reached the output relay deenergizes and the push button on the relay front comes out immediately.

Ordering example for variant

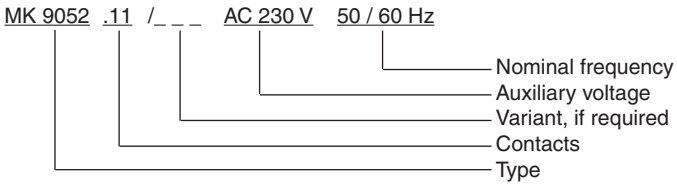

Application Examples

